# 33G Series

## DFK 33G445

- ICX445 CCD Sensor
- 1.2 MP
- GigE Vision compliant
- Trigger and I/Os
- C/CS mount

The 33G series camera DFK 33G445 with a Sony ICX445 sensor delivers 30 frames per second with a resolution of 1280x960 (1.2 MP).

33G Series: The Imaging Source's largest selection of industrial cameras offers developers and integrators a broad selection of resolutions (up to 20 MP) and frame rates to meet diverse application needs and are ideal for continuous operation in industrial environments. The cameras' GigE interface allows for extended cable lengths (up to 100 m) without sacrificing image quality or performance.

The GigE Vision standard allows for rapid integration into new and existing applications via The Imaging Source's IC Imaging Control 4 SDK as well as most other third-party image processing libraries.

Note: This Data Sheet is intended to provide a summary overview for an individual camera model.
The Imaging Source's website also offers information on spectral sensitivity, dimensional diagrams, sensor data sheets, STEP files as well as our full product catalog. For comprehensive technical information, please refer to the Technical Reference Manual specific to each camera model.
www.theimagingsource.com

# 1 Quick Facts

| General | |
|---|---|
| Vision Standard | GigE Vision |
| Dynamic Range | 12 bit |
| Resolution | 1280x960 |
| Frame Rate at Full Resolution | 30 |

| Optical Interface | |
|---|---|
| IR-Cut filter | Yes |
| Sensor Type | Sony ICX445AQA |
| Shutter Type | Global |
| Sensor Format | 1/3 inch |
| Pixel Size | 3.75 µm |
| Lens Mount | C/CS |

| Electrical Interface | |
|---|---|
| Interface | GigE |
| Supply Voltage | 11 VDC to 13 VDC or PoE: 48 VDC to 56 VDC |
| Current Consumption | approx 400 mA @ 12 VDC |
| I/O Connector | 6-pin connector for power supply, trigger and strobe or general purpose input/output |

| Mechanical Data | |
|---|---|
| Dimensions | H: 29 mm, W: 29 mm, L: 57 mm |
| Mass | 65 g |

| Environmental Conditions | |
|---|---|
| Housing Temperature (operating) | -5 °C to 50 °C |
| Temperature (storage) | -20 °C to 80 °C |
| Humidity (operating) | 20 % to 80 % (non-condensing) |
| Humidity (storage) | 20 % to 95 % (non-condensing) |

# 2 Dimensional Diagrams

## 2.1 DFK 33G445 C-Mount without Tripod Adapter

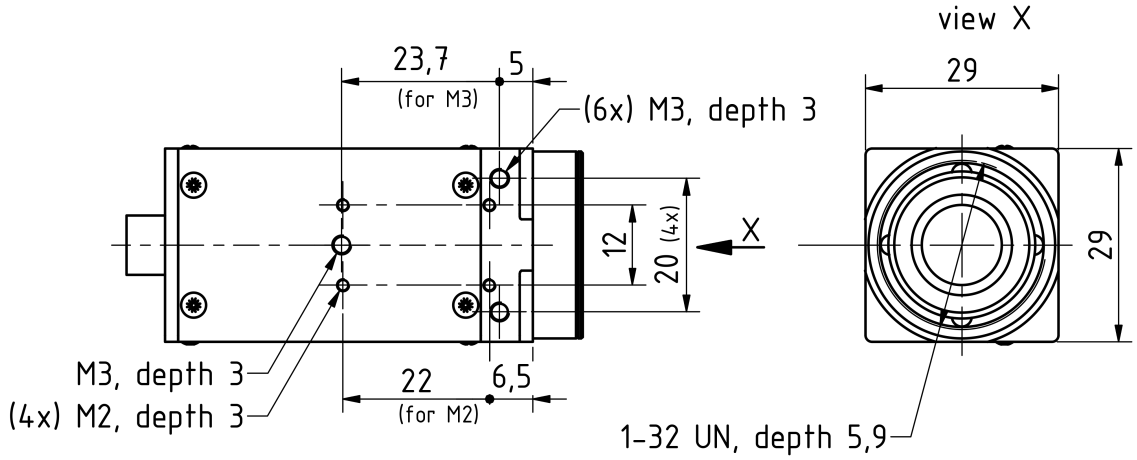


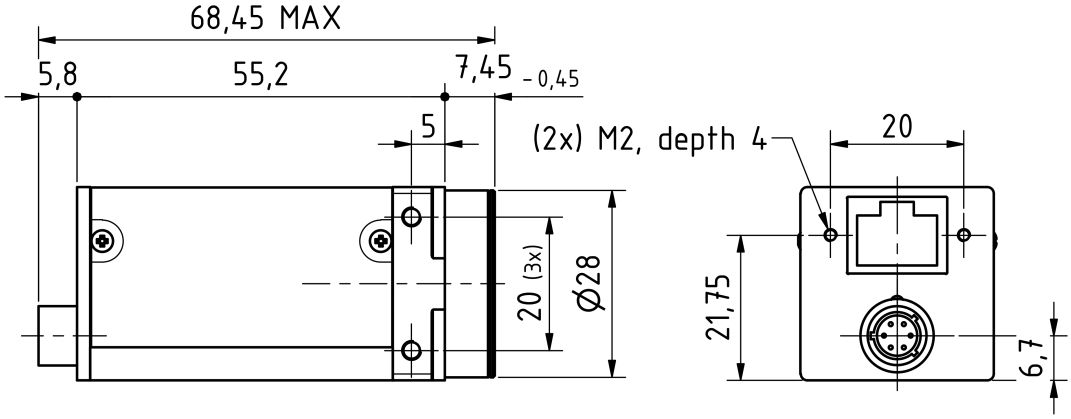


Dimensions: mm
Tolerances: DIN ISO 2768m

# 3 Spectral Characteristics

## 3.1 IR-Cut Filter

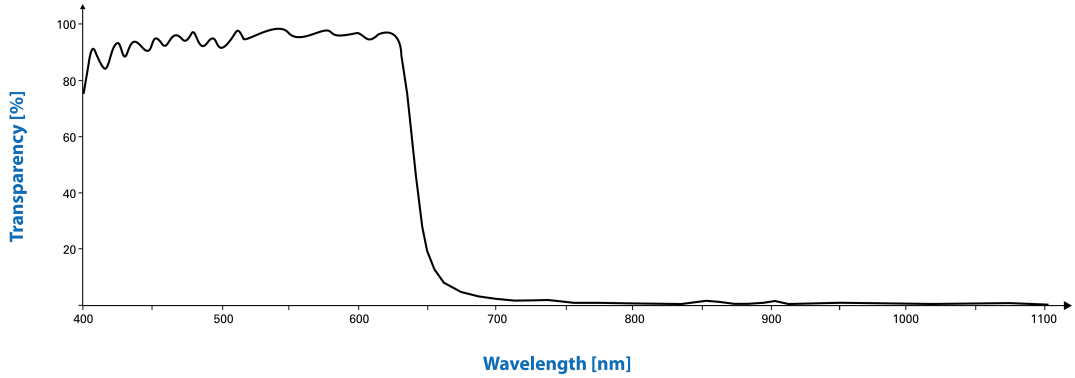

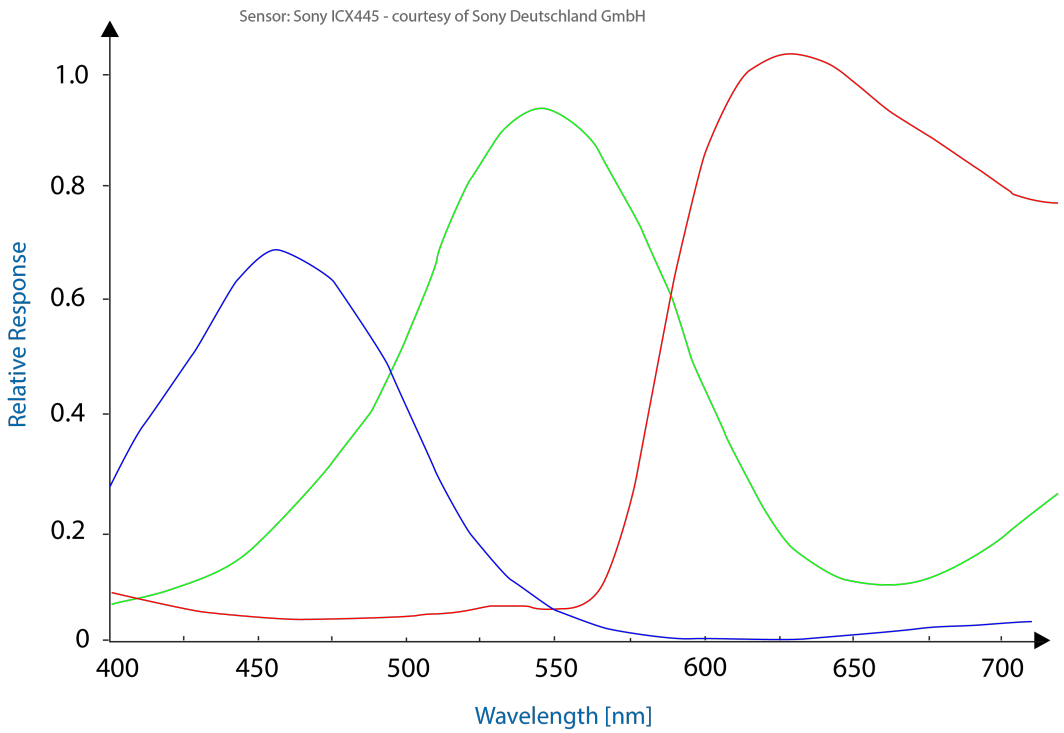
## 3.2 Spectral Sensitivity - ICX445AQA