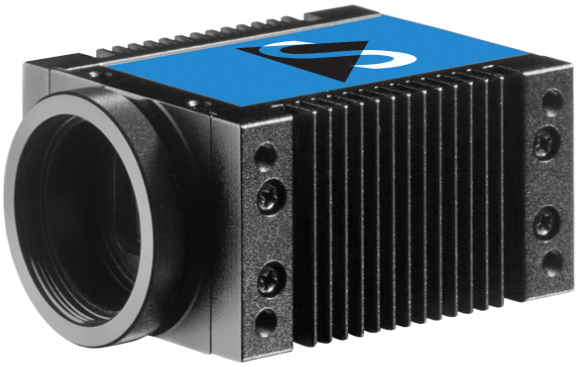

33Ge Series

DFK 33GP2000e

- PYTHON 2000 CMOS Python Sensor
- 2.3 MP
- GigE Vision compliant
- Trigger and I/Os
- C mount

The 33Ge series camera DFK 33GP2000e with a onsemi PYTHON 2000 sensor delivers 50 frames per second with a resolution of 1920x1200 (2.3 MP).

33G Series: The Imaging Source's largest selection of industrial cameras offers developers and integrators a broad selection of resolutions (up to 20 MP) and frame rates to meet diverse application needs and are ideal for continuous operation in industrial environments. The cameras' GigE interface allows for extended cable lengths (up to 100 m) without sacrificing image quality or performance.

The GigE Vision standard allows for rapid integration into new and existing applications via The Imaging Source's IC Imaging Control 4 SDK as well as most other third-party image processing libraries.

Note: This Data Sheet is intended to provide a summary overview for an individual camera model.
The Imaging Source's website also offers information on spectral sensitivity, dimensional diagrams, sensor data sheets, STEP files as well as our full product catalog. For comprehensive technical information, please refer to the Technical Reference Manual specific to each camera model.
www.theimagingsource.com

1 Quick Facts

General	
Vision Standard	GigE Vision
Dynamic Range	10 bit
Resolution	1920x1200
Frame Rate at Full Resolution	50

Optical Interface	
IR-Cut filter	Yes
Sensor Type	onsemi P2000
Shutter Type	Global
Sensor Format	2/3 inch
Pixel Size	4.8 µm
Lens Mount	C (CS optional)

Electrical Interface	
Interface	GigE
Supply Voltage	11 VDC to 13 VDC or PoE: 48 VDC to 56 VDC
Current Consumption	approx 400 mA @ 12 VDC
I/O Connector	6-pin connector for power supply, trigger and strobe or general purpose input/output

Mechanical Data	
Dimensions	H: 29 mm, W: 44 mm, L: 57 mm
Mass	120 g

Environmental Conditions	
Housing Temperature (operating)	-5 °C to 50 °C
Temperature (storage)	-20 °C to 80 °C
Humidity (operating)	20 % to 80 % (non-condensing)
Humidity (storage)	20 % to 95 % (non-condensing)

2 Dimensional Diagrams

2.1 DFK 33GP2000e C-Mount without Tripod Adapter

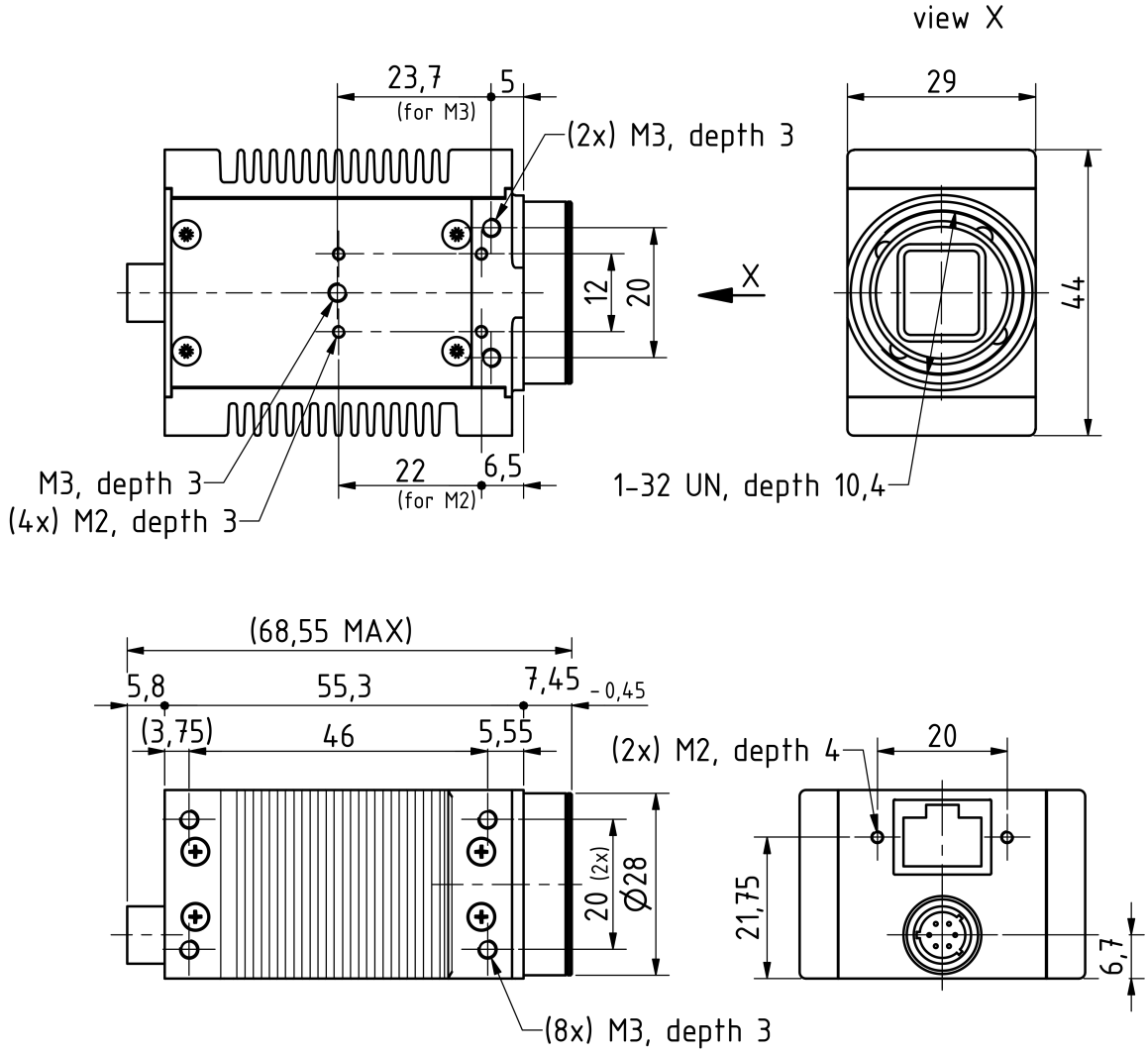

3 Spectral Characteristics

3.1 IR-Cut Filter

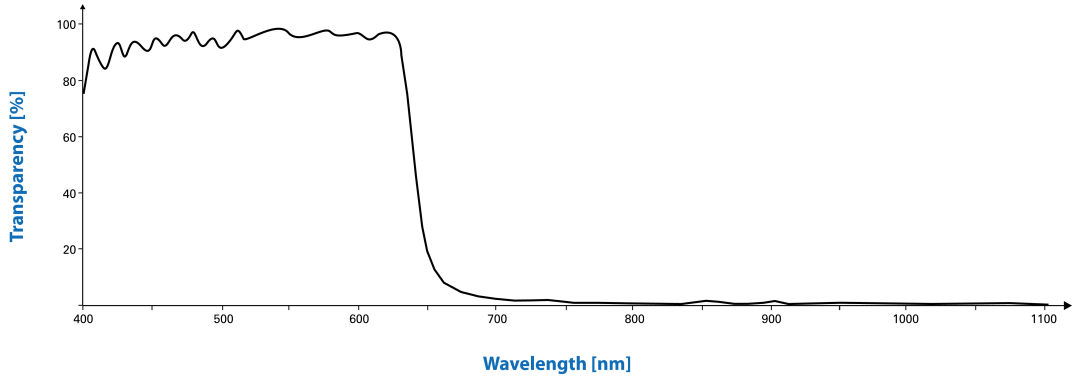
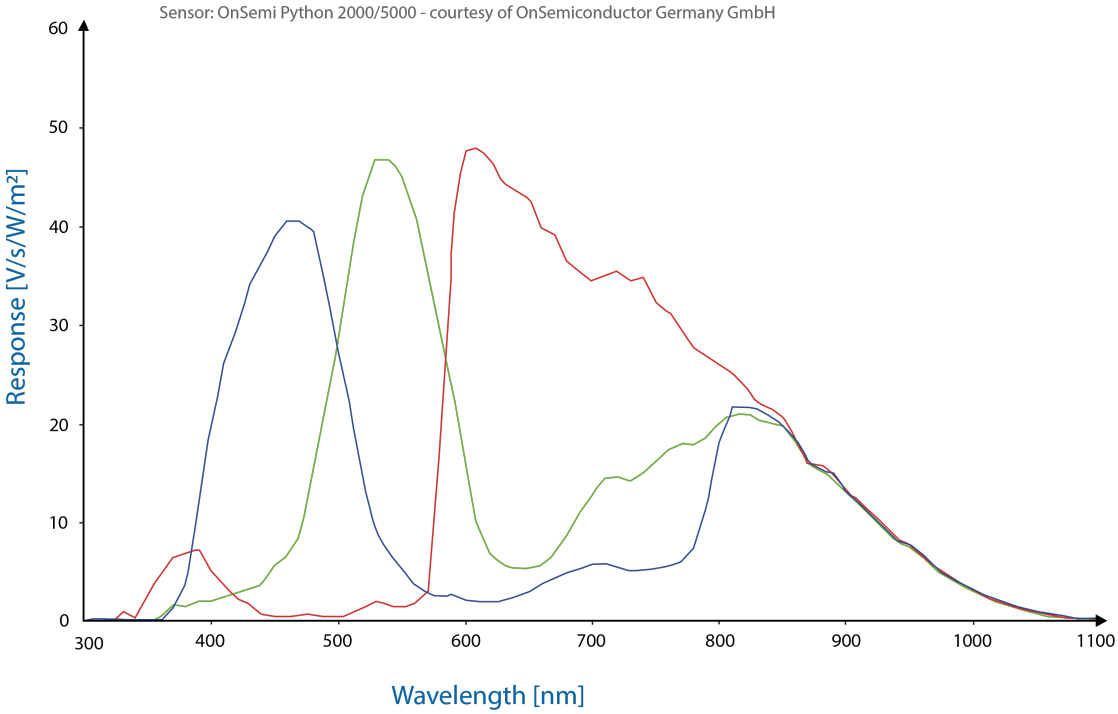
3.2 Spectral Sensitivity - P2000