33U Series

DFK 33UJ003

- MT9J003 CMOS Sensor
- 10.7 MP
- USB3 Vision / UVC compliant
- Trigger and I/Os
- C/CS mount

The 33U series camera DFK 33UJ003 with a onsemi MT9J003 sensor delivers 14 frames per second with a resolution of 3856x2764 (10.7 MP).

33U Series: The Imaging Source's largest selection of industrial cameras offers developers and integrators a broad selection of resolutions (up to 20 MP) and frame rates to meet diverse application needs and are ideal for continuous operation in industrial environments. The cameras' USB 3 interface (Micro-B connector) ensures efficient data transfer with high frame rates.

The USB3 Vision standard allows for rapid integration into new and existing applications via The Imaging Source's IC Imaging Control 4 SDK as well as most other third-party image processing libraries.

Note: This Data Sheet is intended to provide a summary overview for an individual camera model.
The Imaging Source's website also offers information on spectral sensitivity, dimensional diagrams, sensor data sheets, STEP files as well as our full product catalog. For comprehensive technical information, please refer to the Technical Reference Manual specific to each camera model.
www.theimagingsource.com

1 Quick Facts

General	
Vision Standard	USB3 Vision (UVC compliant)
Dynamic Range	12 bit
Resolution	3856x2764
Frame Rate at Full Resolution	14

Optical Interface	
IR-Cut filter	Yes
Sensor Type	onsemi MT9J003
Shutter Type	Rolling
Sensor Format	1/2.3 inch
Pixel Size	1.67 µm
Lens Mount	C/CS

Electrical Interface	
Interface	USB 3.0
Supply Voltage	4.75 VDC to 5.25 VDC
Current Consumption	approx 770 mA @ 5 VDC
I/O Connector	12-pin connector for trigger and strobe or general purpose input/output

Mechanical Data	
Dimensions	H: 29 mm, W: 29 mm, L: 43 mm
Mass	65 g

Environmental Conditions	
Housing Temperature (operating)	-5 °C to 50 °C
Temperature (storage)	-20 °C to 80 °C
Humidity (operating)	20 % to 80 % (non-condensing)
Humidity (storage)	20 % to 95 % (non-condensing)

2 Dimensional Diagrams

2.1 DFK 33UJ003 C-Mount without Tripod Adapter

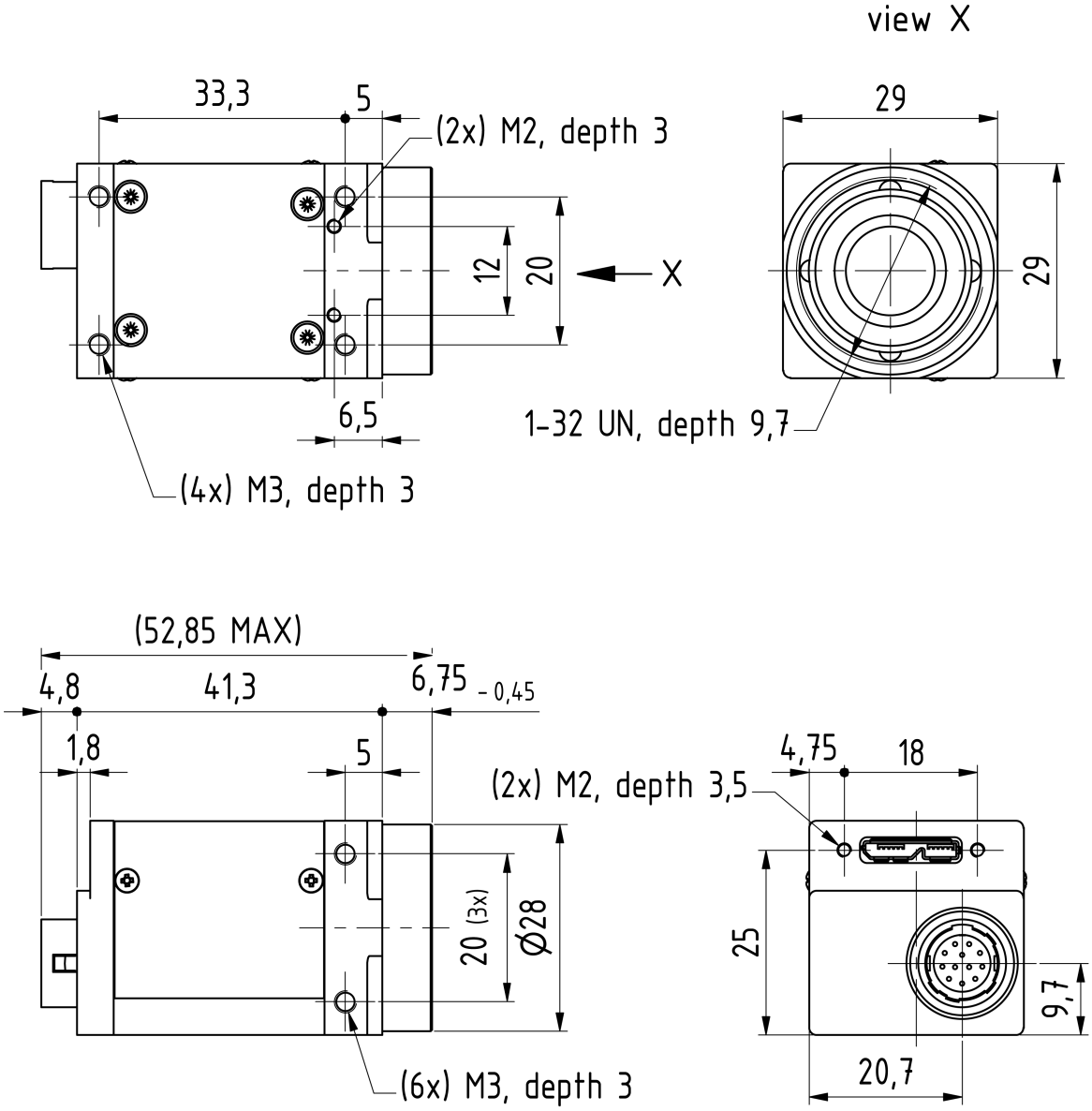

Dimensions: mm
Tolerances: DIN ISO 2768-f

3 Spectral Characteristics

3.1 IR-Cut Filter

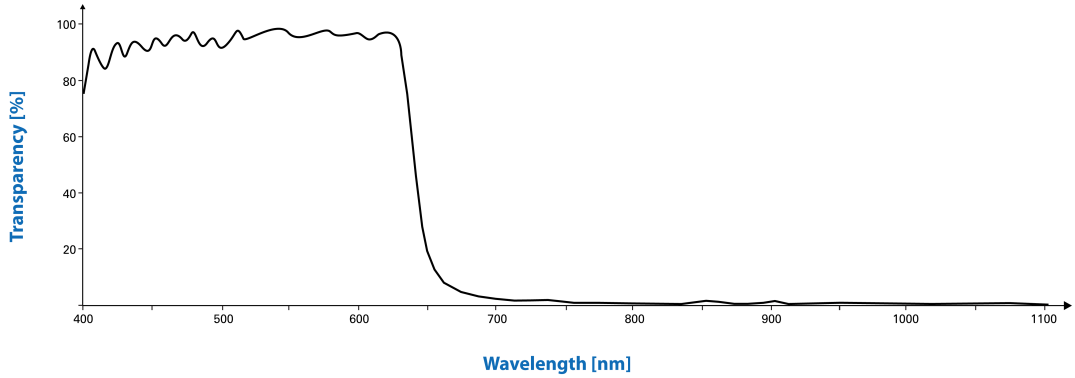
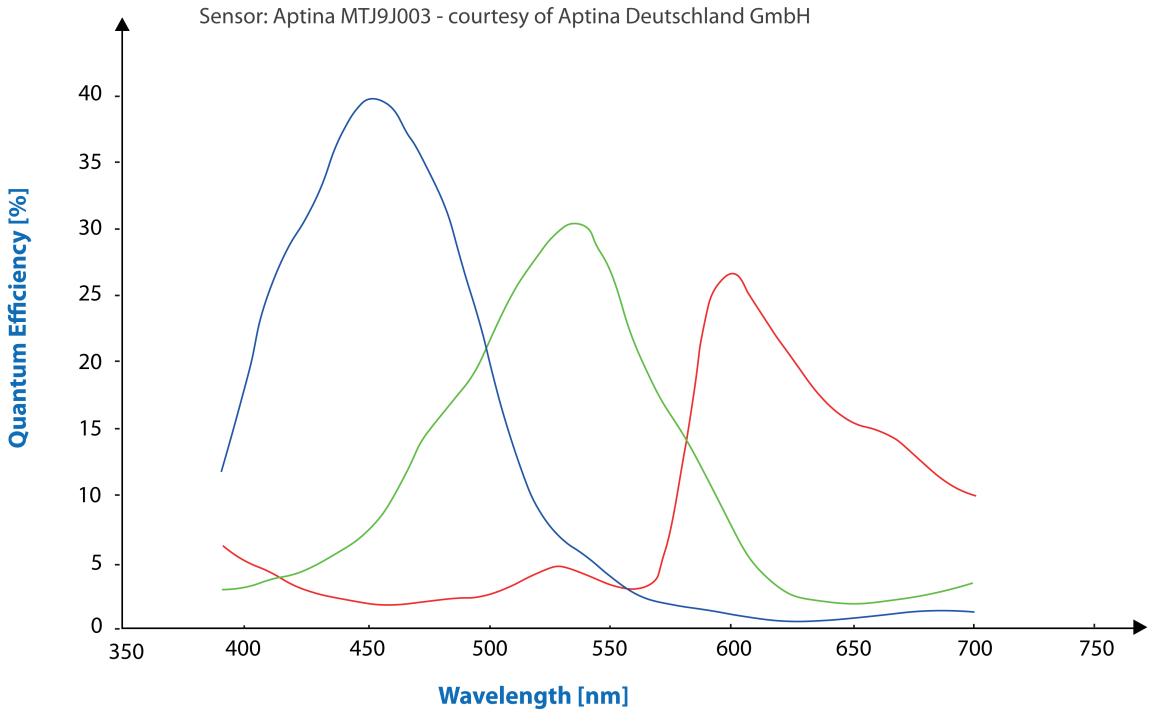
3.2 Spectral Sensitivity - MT9J003