38G Series

DFK 38GX542

- IMX542 CMOS Pregius S Sensor
- 16.1 MP
- GigE Vision compliant
- Trigger and I/Os
- C mount

The 38G series camera DFK 38GX542 with a Sony IMX542 sensor delivers 7 frames per second with a resolution of 5320x3032 (16.1 MP).

Equipped with the latest Sony sensors, 38G Series industrial cameras deliver high resolution (up to 24.5 MP), exceptional image quality and an advanced feature set for demanding machine vision applications in production and factory automation. The GigE interface allows integrators to deploy cameras over longer distances without compromising on image quality or performance.

The GigE Vision standard allows for rapid integration into new and existing applications via The Imaging Source's IC Imaging Control 4 SDK as well as most other third-party image processing libraries.

Note: This Data Sheet is intended to provide a summary overview for an individual camera model.
The Imaging Source's website also offers information on spectral sensitivity, dimensional diagrams, sensor data sheets, STEP files as well as our full product catalog. For comprehensive technical information, please refer to the Technical Reference Manual specific to each camera model.
www.theimagingsource.com

1 Quick Facts

General	
Vision Standard	GigE Vision
Dynamic Range	12 bit
Resolution	5320x3032
Frame Rate at Full Resolution	7

Optical Interface	
IR-Cut filter	Yes
Sensor Type	Sony IMX542-AAQJ-C
Shutter Type	Global
Sensor Format	1.1 inch
Pixel Size	2.74 µm
Lens Mount	C (CS optional)

Electrical Interface	
Interface	GigE
Supply Voltage	9 VDC to 27 VDC or PoE: 48 VDC to 56 VDC
Current Consumption	approx 400 mA @ 12 VDC
I/O Connector	6-pin connector for power supply, trigger and strobe or general purpose input/output

Mechanical Data	
Dimensions	H: 29 mm, W: 44 mm, L: 60 mm
Mass	144 g

Environmental Conditions	
Housing Temperature (operating)	-5 °C to 50 °C
Temperature (storage)	-20 °C to 80 °C
Humidity (operating)	20 % to 80 % (non-condensing)
Humidity (storage)	20 % to 95 % (non-condensing)

2 Dimensional Diagrams

2.1 DFK 38GX542 C-Mount without Tripod Adapter

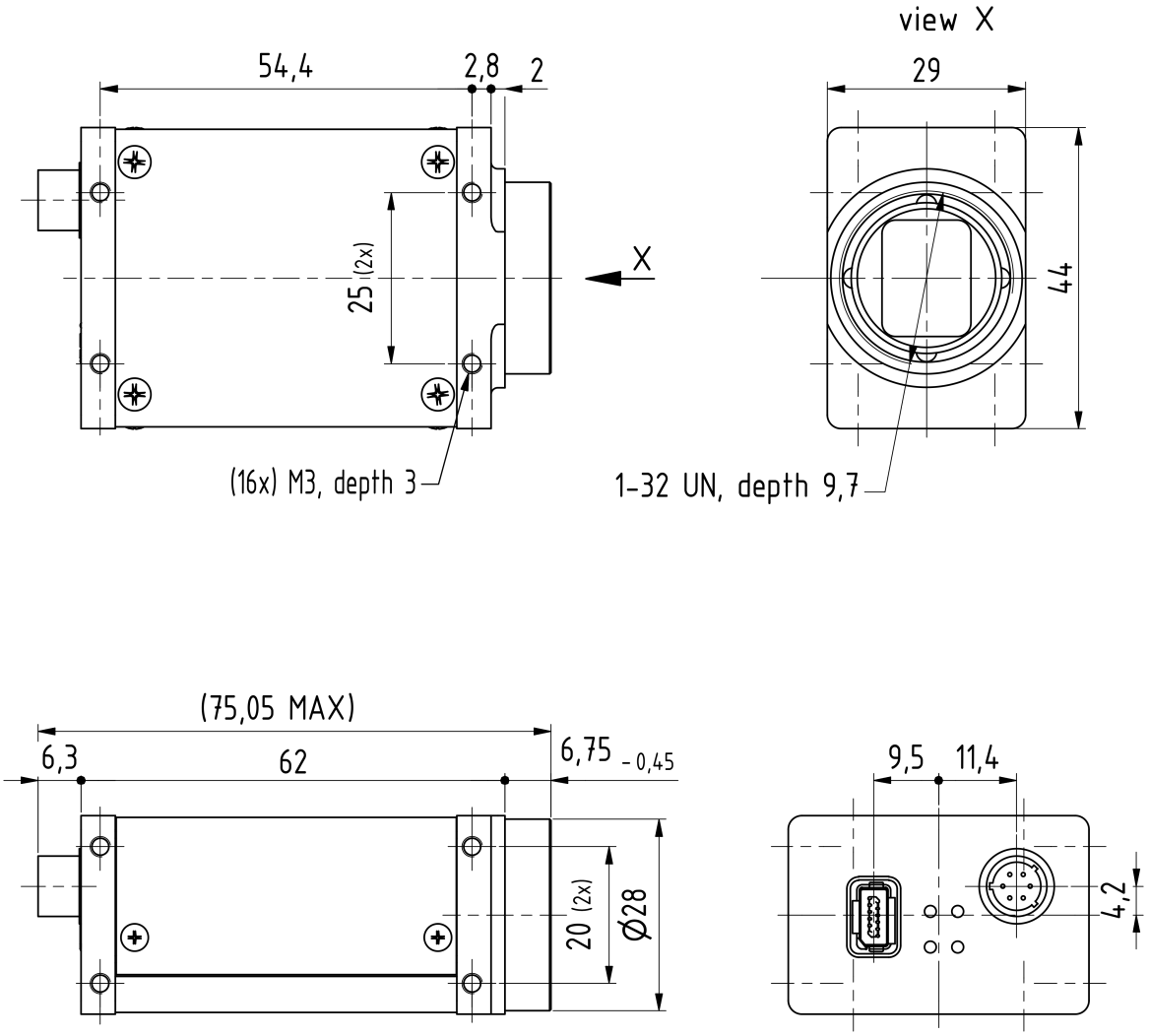

Dimensions: mm
Tolerances: DIN ISO 2768-f

3 Spectral Characteristics

3.1 IR-Cut Filter

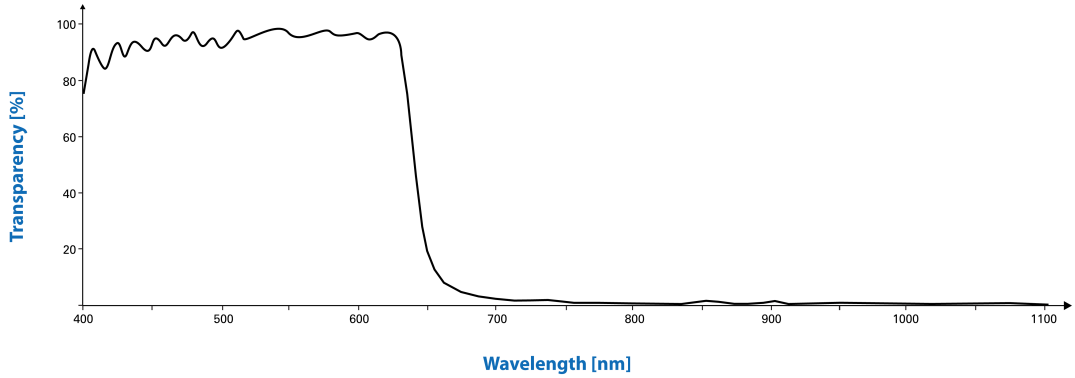

3.2 Spectral Sensitivity - IMX542-AAQJ-C
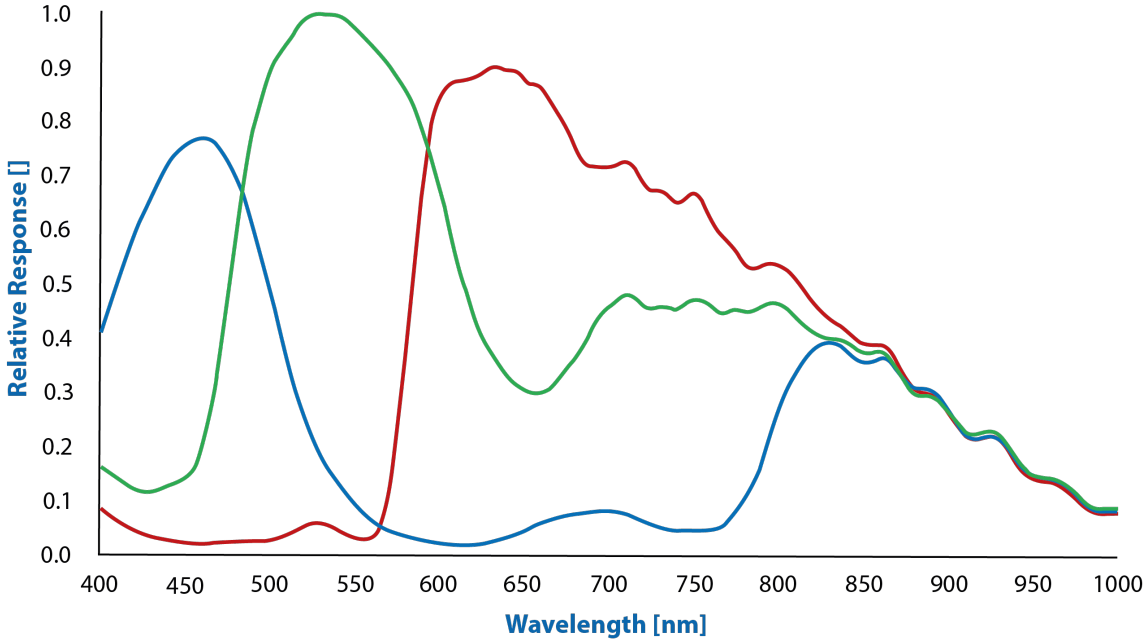
Sensor: Sony IMX540/541/542 *courtesy of Sony Deutschland GmbH*