38G Series

DMK 38GX541

- IMX541 CMOS Pregius S Sensor
- 20.3 MP
- GigE Vision compliant
- Trigger and I/Os
- C mount

The 38G series camera DMK 38GX541 with a Sony IMX541 sensor delivers 5 frames per second with a resolution of 4504x4504 (20.3 MP).

Equipped with the latest Sony sensors, 38G Series industrial cameras deliver high resolution (up to 24.5 MP), exceptional image quality and an advanced feature set for demanding machine vision applications in production and factory automation. The GigE interface allows integrators to deploy cameras over longer distances without compromising on image quality or performance.

The GigE Vision standard allows for rapid integration into new and existing applications via The Imaging Source's IC Imaging Control 4 SDK as well as most other third-party image processing libraries.

Note: This Data Sheet is intended to provide a summary overview for an individual camera model.
The Imaging Source's website also offers information on spectral sensitivity, dimensional diagrams, sensor data sheets, STEP files as well as our full product catalog. For comprehensive technical information, please refer to the Technical Reference Manual specific to each camera model.
www.theimagingsource.com

1 Quick Facts

General	
Vision Standard	GigE Vision
Dynamic Range	12 bit
Resolution	4504x4504
Frame Rate at Full Resolution	5

Optical Interface	
IR-Cut filter	No
Sensor Type	Sony IMX541-AAMJ-C
Shutter Type	Global
Sensor Format	1.1 inch
Pixel Size	2.74 µm
Lens Mount	C (CS optional)

Electrical Interface	
Interface	GigE
Supply Voltage	9 VDC to 27 VDC or PoE: 48 VDC to 56 VDC
Current Consumption	approx 400 mA @ 12 VDC
I/O Connector	6-pin connector for power supply, trigger and strobe or general purpose input/output

Mechanical Data	
Dimensions	H: 29 mm, W: 44 mm, L: 60 mm
Mass	144 g

Environmental Conditions	
Housing Temperature (operating)	-5 °C to 50 °C
Temperature (storage)	-20 °C to 80 °C
Humidity (operating)	20 % to 80 % (non-condensing)
Humidity (storage)	20 % to 95 % (non-condensing)

2 Dimensional Diagrams

2.1 DMK 38GX541 C-Mount without Tripod Adapter

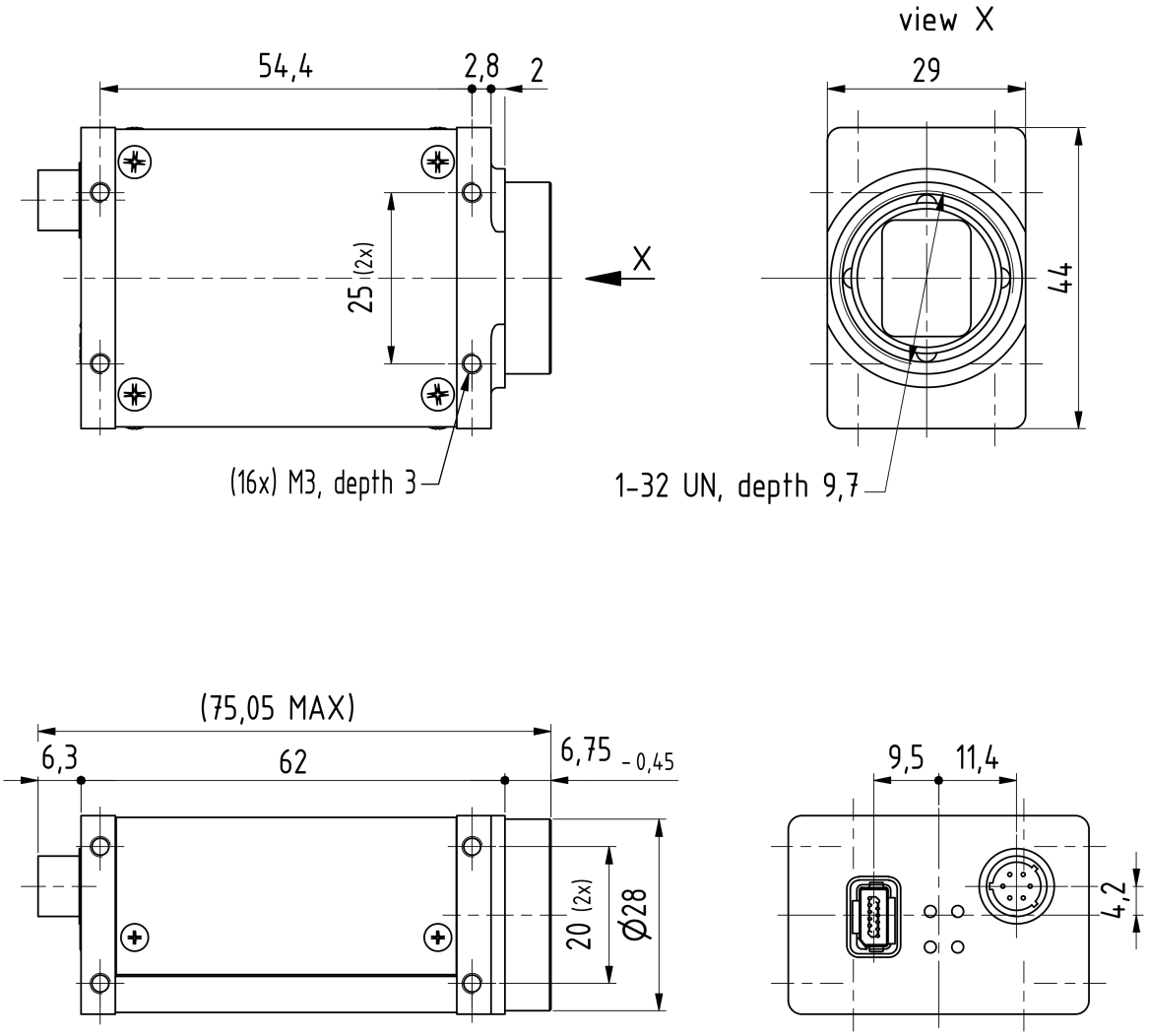

Dimensions: mm
Tolerances: DIN ISO 2768-f

3 Spectral Characteristics
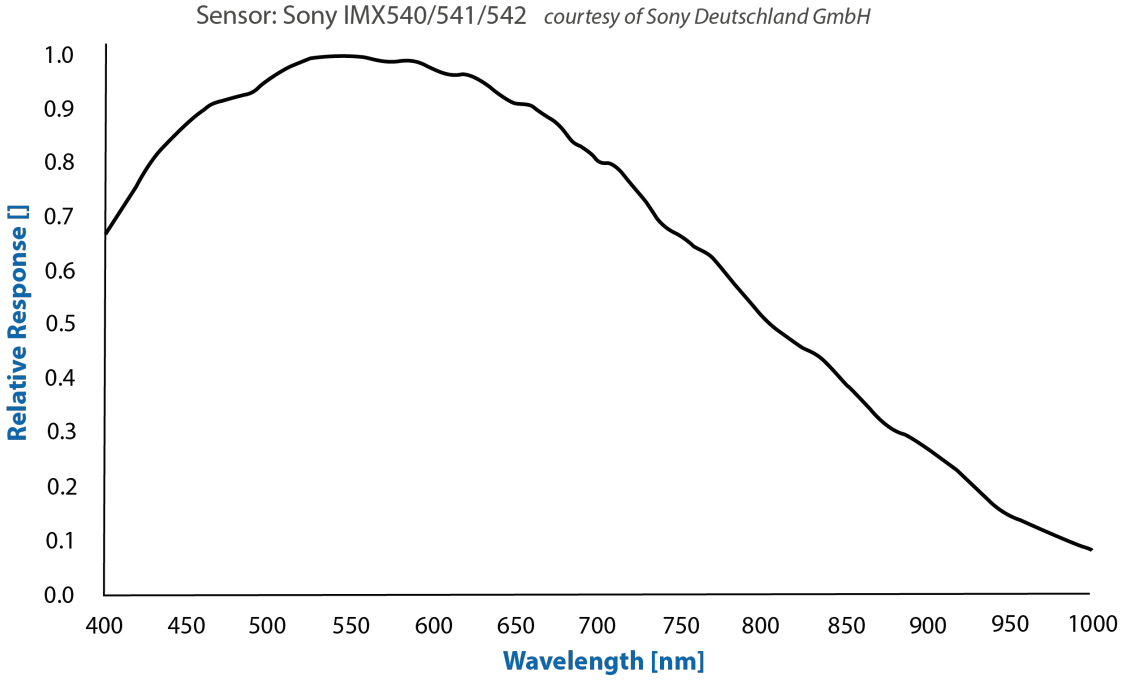
3.1 Spectral Sensitivity - IMX541-AAMJ-C