# Visus IP67 Series

## ViM 47GR0521-I67

- AR0521 CMOS Sensor
- 5 MP
- GigE Vision compliant
- Trigger and I/Os
- M12x0.5 Mount
- IP67 Ingress Protection

The Visus IP67 series camera ViM 47GR0521-I67 with a OnSemi AR0521 sensor delivers 22 frames per second with a resolution of 2592x1944 (5 MP).

The Imaging Source's Visus IP67 series GigE cameras are built to meet the demands of modern machine vision, delivering performance, efficiency, and integration flexibility. With a compact industrial housing and streamlined internal architecture, Visus IP67 series cameras enable high-performance imaging with a reduced hardware footprint.

The series features The Imaging Source's S-Ultra S-Ultra M12 S-Mount lenses and offers seamless integration into existing GigE Vision and GenICam-based workflows, minimizing engineering overhead and accelerating time to market. Lower power draw and efficient thermal design reduce system complexity and help keep integration simple. Whether you're designing high-throughput inspection systems or scaling industrial automation, Visus IP67 series cameras provide a reliable and future-proof platform to support your machine vision applications.

The GigEVision standard allows for rapid integration into new and existing applications via The Imaging Source's IC Imaging Control 4 SDK as well as most other third-party image processing libraries.

Note: This Data Sheet is intended to provide a summary overview for an individual camera model.
The Imaging Source’s website also offers information on spectral sensitivity, dimensional diagrams, sensor data sheets, STEP files as well as our full product catalog. For comprehensive technical information, please refer to the Technical Reference Manual specific to each camera model.
www.theimagingsource.com

# 1 Quick Facts

| General | |
|---|---|
| Vision Standard | GigE Vision |
| Resolution | 2592x1944 |
| Dynamic Range | 12 bit |
| Frame Rate at Full Resolution | 22 |

| Optical Interface | |
|---|---|
| IR-Cut filter | No |
| Sensor Type | OnSemi AR0521 |
| Shutter Type | Rolling |
| Sensor Format | 1/2.5 inch |
| Pixel Size | 2.2 µm |
| Lens Mount | M12x0.5 |

| Electrical Interface | |
|---|---|
| Interface | GigE |
| Supply Voltage | 4.75 VDC to 14 VDC or PoE: 48 VDC to 56 VDC |
| Current Consumption | approx 150 mA @ 12 VDC |
| Power Consumption | approx 2.3 W PoE |

| Mechanical Data | |
|---|---|
| Dimensions | H: 43 mm, W: 43 mm, L: 62 mm |
| Mass | 124 g |
| Protection Class | IP6K6, IP6K7 (ISO 20653) * |

*) Protection only applies while an IP67-rated M12 ethernet cable and either an IP67-rated M8 I/O cable or an IP67-rated M8 port protection cap is attached and the lens tube is fastened.

| Environmental Conditions | |
|---|---|
| Housing Temperature (operating) | 0 °C to 50 °C |
| Temperature (storage) | -20 °C to 80 °C |
| Humidity (operating) | 20 % to 80 % (non-condensing) |
| Humidity (storage) | 20 % to 95 % (non-condensing) |

# 2 Dimensional Diagrams

## 2.1 ViM 47GR0521-I67 without Tripod Adapter

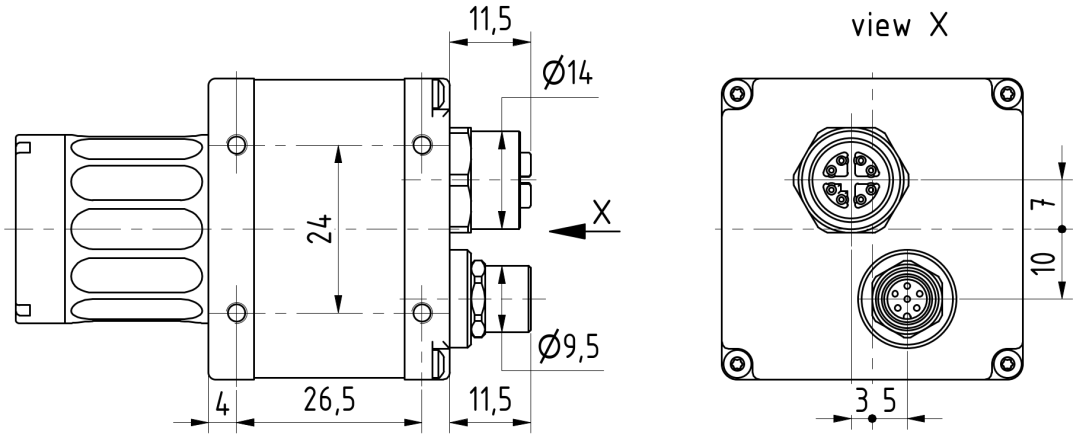


*) available in different lengths

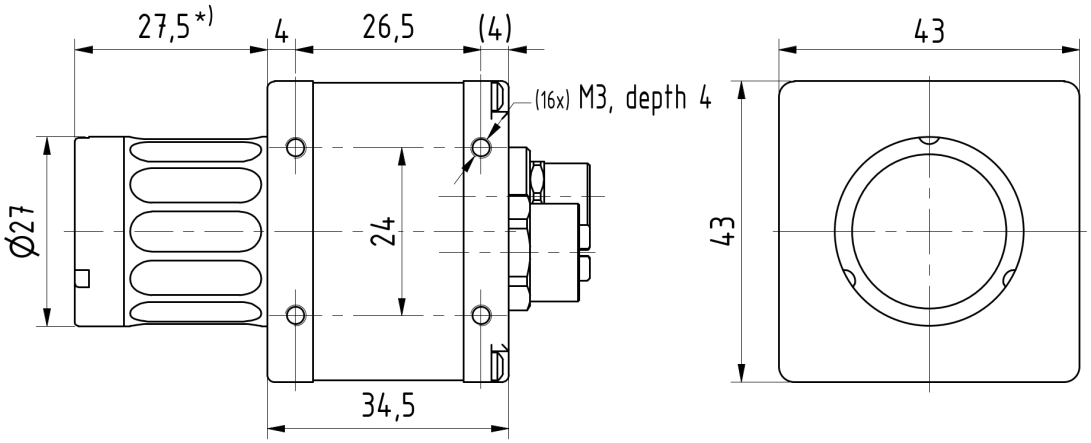


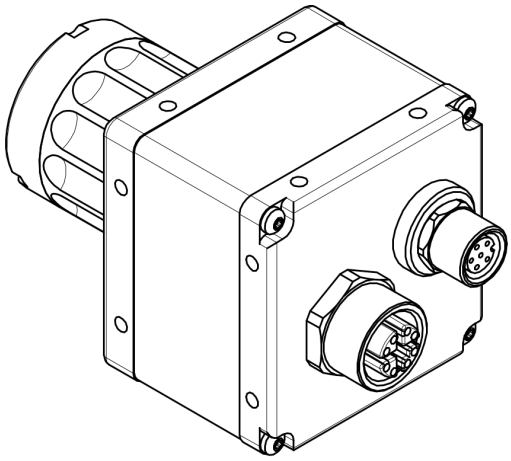

Scale: 1 : 1
Dimensions: mm
Tolerances: DIN ISO 2768-m

317-25-01-02-00-a

# 3 Spectral Characteristics
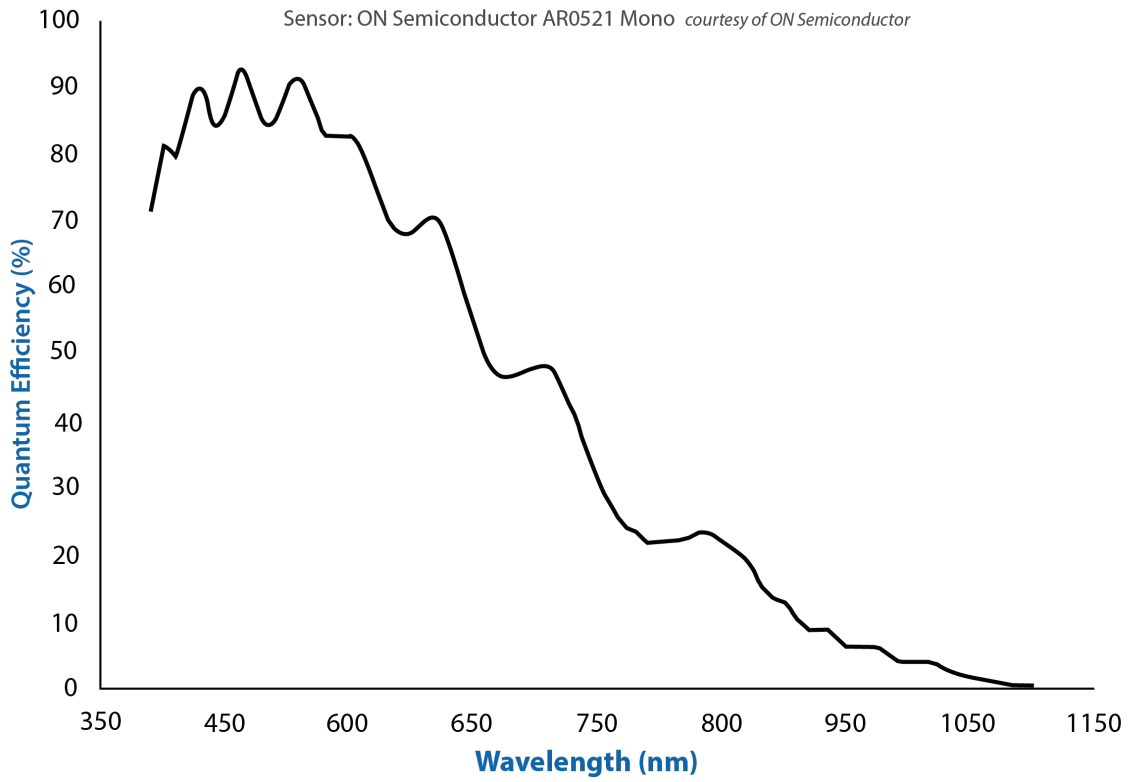
## 3.1 Spectral Sensitivity - AR0521