TPL 1228 20MP 4/3 Lens Technical Data

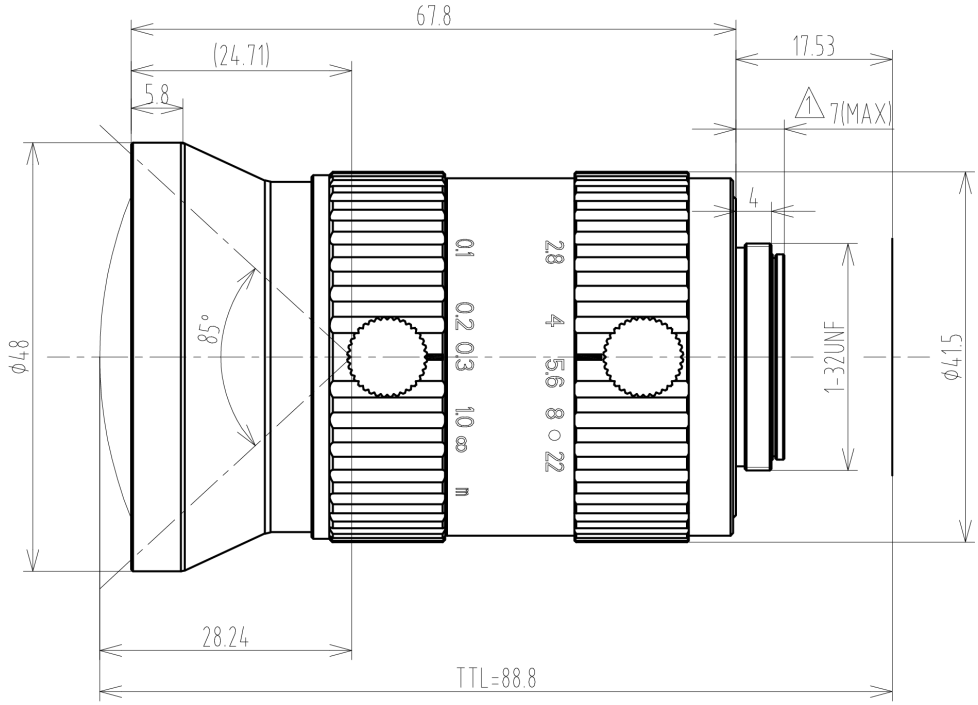

Specifications	
Format	4/3"
Resolution	20 MP
Pixel Size	3,45 µm
Mount	C
Focal Length (f)	12 mm
Image Circle Diameter	22,4 mm
Iris	2,8 - 22
Minimum Object Distance (MOD)	10 cm
Distortion	2 %
Filter Thread	n/a mm
Mass	244,5 g
Operating Temperature	-5 °C - 50 °C

© 2026 The Imaging Source - Specification is subject to change without any notice.