TPL 5028 10MP Lens Technical Data

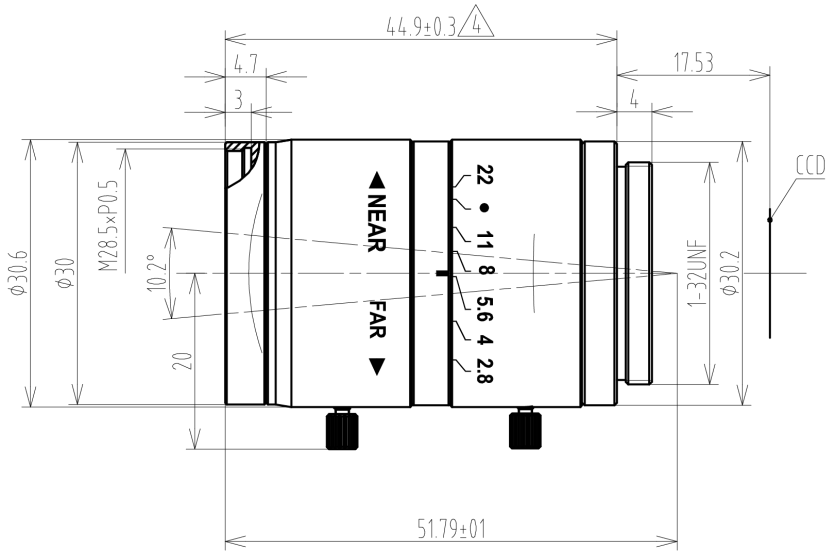

Specifications	
Format	1/1.8"
Resolution	10 MP
Pixel Size	3,45 µm
Mount	C
Focal Length (f)	50 mm
Image Circle Diameter	8,9 mm
Iris	2,8 - C
Minimum Object Distance (MOD)	30 cm
Distortion	0.05 %
Filter Thread	M28x0.5 mm
Mass	75 g
Operating Temperature	-5 °C - 50 °C

© 2026 The Imaging Source - Specification is subject to change without any notice.