Technical Details

AcC 36DR2020-I67
Technical Reference Manual

THE IMAGINGSOURCE
TECHNOLOGY BASED ON STANDARDS

Table of Contents

1. Quick Facts 3

2. Electrical Characteristics 5

2.1 Absolute Maximum Ratings 5

2.2 Recommended Operating Conditions 5

3. Dimensional Diagrams 6

3.1 AcC 36DR2020-I67 without Tripod Adapter 6

3.2 AcC 36DR2020-I67 with Tripod Adapter 7

4. Spectral Characteristics 8

4.1 Spectral Sensitivity - AR2020 8

5. I2C Devices 9

6. Software Support 10

6.1 Further Assistance 10

7. Conformity 11

7.1 EN 55032 Class A 11

7.2 FCC 15B Class A 11

1 Quick Facts

General	
Dynamic Range	10 bit
Resolution	5120x3840
Frame Rate at Full Resolution	14 *
Pixel Formats	10-Bit Bayer (GR)

*) Assuming the deserializer is connected to the host with 4 data lanes at 2500 Mbps each.

Optical Interface	
Sensor Type	ON Semiconductor AR2020
Shutter Type	Rolling
Sensor Format	1/1.8 inch
Pixel Size	1.4 µm

Electrical Interface	
Interface	GMSL2 via FAKRA connector
Supply voltage	10 VDC to 20 VDC
Current consumption	approx 90 mA @ 12 VDC

Mechanical Data	
Dimensions	H: 36 mm, W: 36 mm, L: 60.3 mm
Mass	80 g
Protection Class	IP6K6, IP6K7 (ISO 20653) *

*) Protection only while The Imaging Source IP67 FAKRA cable is connected to the camera.

Adjustments	
Shutter	15 µs to 0.25 s
Gain	0 dB to 47.625 dB

Environmental	
Temperature (operating)	-5 °C to 45 °C
Temperature (storage)	-20 °C to 60 °C
Humidity (operating)	20 % to 80 % (non-condensing)
Humidity (storage)	20 % to 95 % (non-condensing)

2 Electrical Characteristics

2.1 Absolute Maximum Ratings

Item	Symbol	Pins	Min	Max	Unit
Supply voltage	V_COAX		-0.3	+27.0	V

2.2 Recommended Operating Conditions

Item	Symbol	Pins	Min	Typ	Max	Unit
Supply voltage	V_COAX		10.0	12.0	24.0	V

3 Dimensional Diagrams

3.1 AcC 36DR2020-I67 without Tripod Adapter

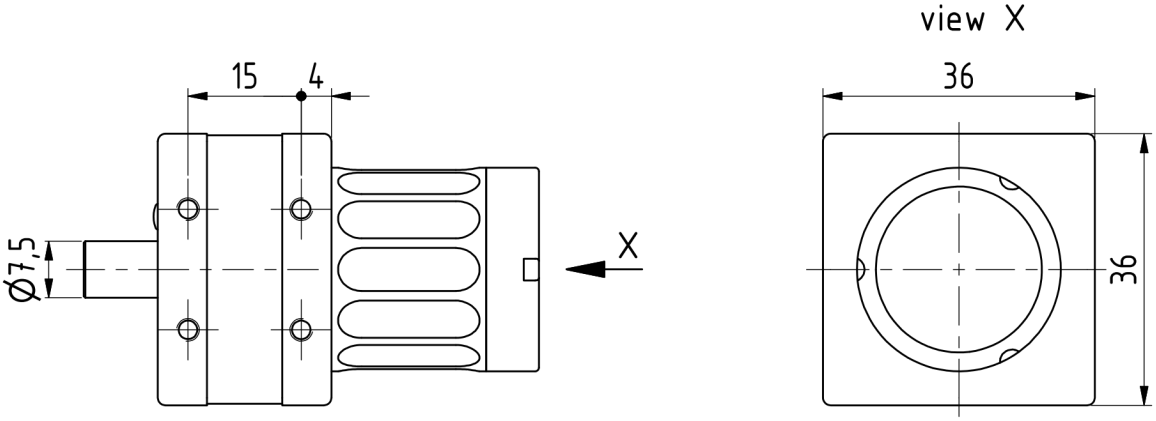

*) available in different lengths

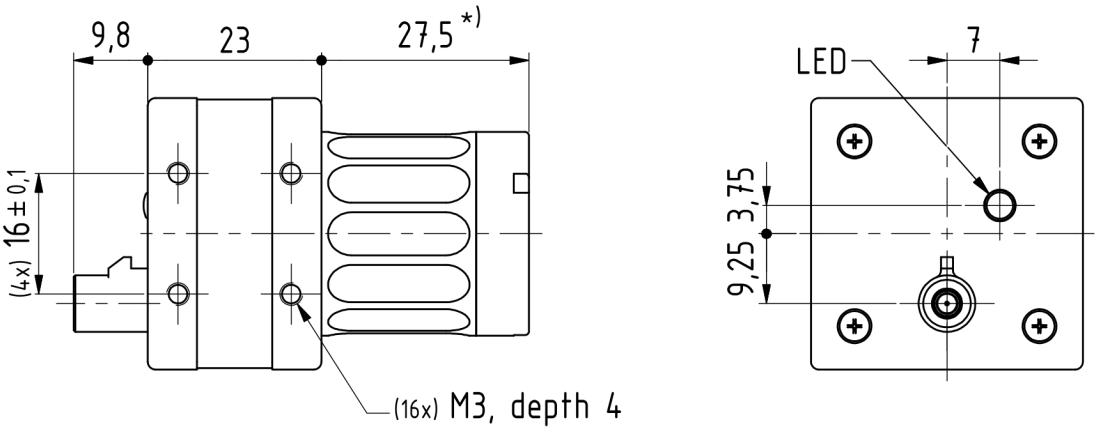

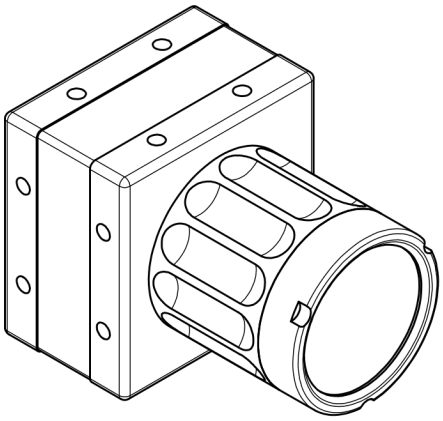

Scale: 1 : 1
Dimensions: mm
Tolerances: DIN ISO 2768-m

275-20-1-01-00-c (w/o tripod-adapter)

3.2 AcC 36DR2020-I67 with Tripod Adapter

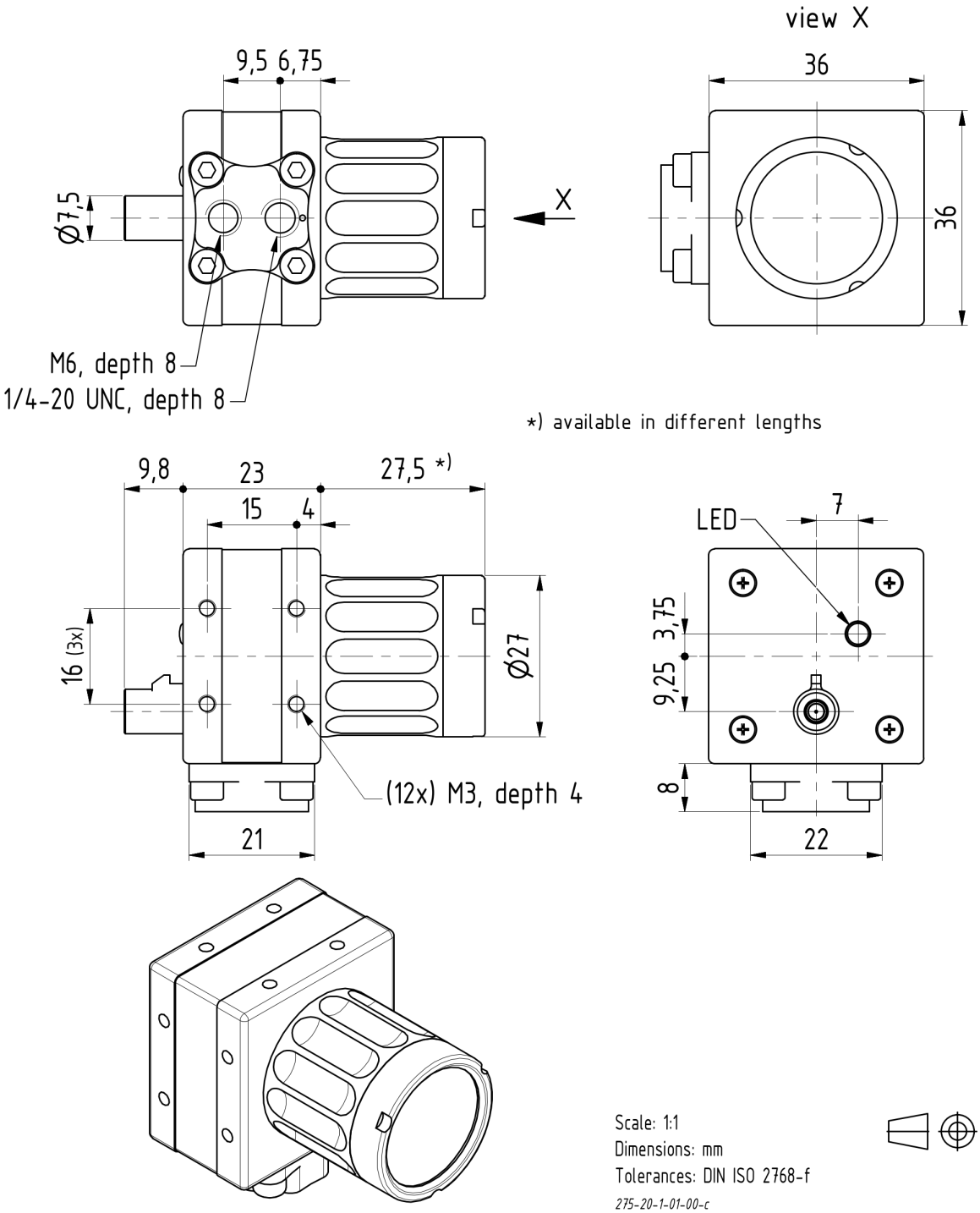

4 Spectral Characteristics

4.1 Spectral Sensitivity - AR2020

Sensor: onsemi AR2020 *courtesy of onsemi*

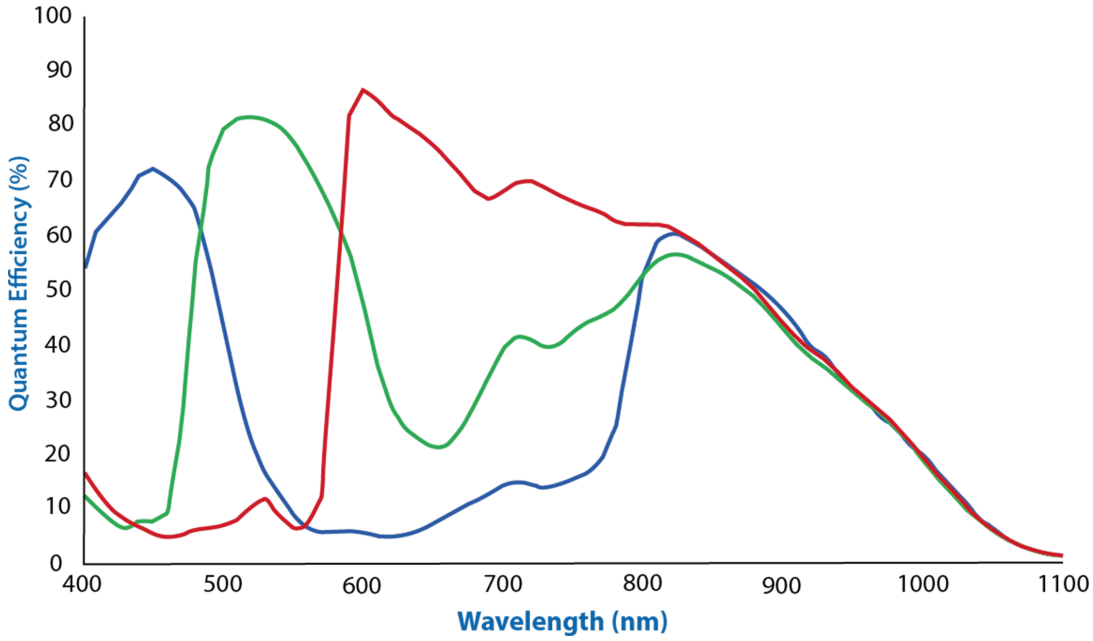

5 I2C Devices

There are multiple I2C devices on the AcC 36DR2020-I67 sensor board. The following table describes the parts and their I2C addresses:

Address (7-bit)	Device	Description
0x36	AR2020	Image Sensor
0x40	MAX9295A	GMSL2 Serializer
0x44	LCMXO3L-1300E	I2C Mapping and Sensor Control FPGA
0x50	AT24C256C	EEPROM

6 Software Support

The Imaging Source provides driver packages for camera access on supported platforms. The driver documentation for the JetPack driver can be found here: theimagingsource-drivers Documentation.

6.1 Further Assistance

For more detailed information, register settings and using the camera on other platforms, please contact The Imaging Source.

7 Conformity

7.1 EN 55032 Class A

Warning: Operation of this equipment in a residential environment could cause radio interference.

7.2 FCC 15B Class A

Note: This equipment has been tested and found to comply with the limits for a Class A digital device, pursuant to part 15 of the FCC Rules. These limits are designed to provide reasonable protection against harmful interference when the equipment is operated in a commercial environment. This equipment generates, uses, and can radiate radio frequency energy and, if not installed and used in accordance with the instruction manual, may cause harmful interference to radio communications. Operation of this equipment in a residential area is likely to cause harmful interference in which case the user will be required to correct the interference at his own expense.

AcC 36DR2020-I67

All product and company names in this document may be trademarks and tradenames of their respective owners and are hereby acknowledged.

The Imaging Source Europe GmbH cannot and does not take any responsibility or liability for any information contained in this document. The source code presented in this document is exclusively used for didactic purposes. The Imaging Source does not assume any kind of warranty expressed or implied, resulting from the use of the content of this document or the source code.

The Imaging Source Company reserves the right to make changes in specifications, function or design at any time and without prior notice.

Last update: May 2026
© 2026 The Imaging Source Europe GmbH
All rights reserved. Reprint, also in parts, only allowed with permission of The Imaging Source Europe GmbH.

All weights and dimensions are approximate. Unless otherwise specified, the lenses shown in the context of cameras are not shipped with these cameras.

Headquarters:

The Imaging Source Europe GmbH
Überseetor 18, D-28217 Bremen, Germany
Phone: +49 421 33591-0

North & South America:

The Imaging Source, LLC
Suite 470, 4600 Park Road, Charlotte, NC 28209, United States
Phone: +1 877-462-4772

Asia Pacific:

The Imaging Source Asia Co., Ltd.
3F., No. 43-7/8, Zhongxing Road
Xizhi District, New Taipei City 221012, Taiwan
Phone: +886 2-2792-3153

www.theimagingsource.com