Technical Details

DFK 33UX249
Technical Reference Manual

THE IMAGINGSOURCE
TECHNOLOGY BASED ON STANDARDS

Table of Contents

1. Quick Facts 5

2. Dimensional Diagrams 7

2.1 DFK 33UX249 C-Mount with Tripod Adapter 7

2.2 DFK 33UX249 C-Mount without Tripod Adapter 8

2.3 DFK 33UX249 CS-Mount with Tripod Adapter 9

2.4 DFK 33UX249 CS-Mount without Tripod Adapter 10

3. I/O Connector 11

3.1 12-pin I/O Connector 11

3.1.1 TRIGGER_IN 12

3.1.2 STROBE_OUT 12

4. Spectral Characteristics 13

4.1 IR-Cut Filter 13

4.2 Spectral Sensitivity - IMX249LQJ-C 13

5. Camera Controls 14

5.1 Sensor Readout Control 14

5.1.1 Pixel Format 14

5.1.1.1 8-Bit Bayer Raw 15

5.1.1.2 16-Bit Bayer Raw 15

5.1.1.3 YUV 4:2:2 15

5.1.1.4 YUV 4:1:1 16

5.1.1.5 RGB24 16

5.1.1.6 8-Bit Monochrome 16

5.1.2 Resolution 16

5.1.3 Frame Rate 17

5.1.4 Partial Scan Offset 19

5.1.5 Image Flipping 21

5.2 Image Sensor Control 21

5.2.1 Exposure Time 21

5.2.2 Gain 22

5.2.3 Black Level 22

5.3 Automatic Exposure and Gain Control 22

5.3.1 Auto Exposure 23

5.3.2 Auto Gain 23

5.3.3 Auto Reference Value 23

5.3.4 Highlight Reduction 24

5.3.5 Auto Exposure Limits 24

5.3.6 Auto Gain Limits 25

5.4 Trigger 26

5.4.1 Trigger Mode 26

5.4.2 Trigger Polarity 26
5.4.3 Software Trigger 27
5.4.4 Trigger Exposure Mode 27
5.4.5 Trigger Burst Count 28
5.4.6 Trigger Source 28
5.4.7 Trigger Overlap 29
5.4.8 Trigger Delay 29
5.5 Trigger Timing Parameters 30
5.5.1 Trigger Debounce Time 30
5.5.2 Trigger Mask Time 30
5.5.3 Trigger Noise Suppression Time 31
5.6 Digital I/O 31
5.6.1 General Purpose Input 31
5.6.2 General Purpose Output 31
5.7 Strobe 32
5.7.1 Strobe Enable 32
5.7.2 Strobe Polarity 32
5.7.3 Strobe Operation 33
5.7.4 Strobe Duration 33
5.7.5 Strobe Delay 34
5.8 White Balance 34
5.8.1 Auto White Balance 34
5.8.2 White Balance Mode 35
5.8.3 Manual White Balance 36
5.9 Image Processing 38
5.9.1 Gamma 38
5.9.2 Lookup Table 39
5.10 Color Processing 40
5.10.1 Hue 40
5.10.2 Saturation 40
5.11 Region of Interest for Auto Functions 41
5.11.1 Auto Functions ROI Enable 41
5.11.2 Auto Functions ROI Preset 41
5.11.3 Auto Functions ROI Custom Rectangle 42
5.12 User Sets 43
5.12.1 User Set Selector 44
5.12.2 Load User Set 44
5.12.3 Save User Set 44
5.12.4 Default User Set 45
5.13 Timestamp Control 45
5.13.1 Timestamp Latch 45
5.13.2 Timestamp Latch Value 45
5.13.3 Timestamp Reset 46

5.14 Events 46
5.14.1 Event Selector 46
5.14.2 Event Notification 46
5.14.3 Event Exposure End 47
5.14.4 Event Frame Trigger Missed 48
5.14.5 Event Line1 Falling Edge 48
5.14.6 Event Line1 Rising Edge 49
5.14.7 Event Test 49
5.15 Bandwidth Control 50
5.15.1 Device Link Throughput Limit Mode 50
5.15.2 Device Link Throughput Limit 50
6. Revision History 51

1 Quick Facts

General	
Vision Standard	USB3 Vision
Dynamic Range	12 bit
Resolution	1920x1200
Frame Rate at Full Resolution	48
Pixel Formats	8-Bit Monochrome 8-Bit Bayer (GB) 16-Bit Bayer (GB) RGB24 YUV 4:2:2 YUV 4:1:1

Optical Interface	
IR-Cut filter	Yes
Sensor Type	Sony IMX249LQJ-C
Shutter Type	Global
Sensor Format	1/1.2 inch
Pixel Size	5.86 µm
Lens Mount	C/CS

Electrical Interface	
Interface	USB 3.0
Supply Voltage	4.75 VDC to 5.25 VDC
Current Consumption	approx 590 mA @ 5 VDC
I/O Connector	12-pin connector for trigger and strobe or general purpose input/output

Mechanical Data	
Dimensions	H: 29 mm, W: 29 mm, L: 43 mm
Mass	65 g

Adjustments	
Shutter	30 µs to 30 s
Gain	0 dB to 48 dB

Environmental Conditions	
Housing Temperature (operating)	-5 °C to 50 °C
Temperature (storage)	-20 °C to 80 °C
Humidity (operating)	20 % to 80 % (non-condensing)
Humidity (storage)	20 % to 95 % (non-condensing)

2 Dimensional Diagrams

2.1 DFK 33UX249 C-Mount with Tripod Adapter

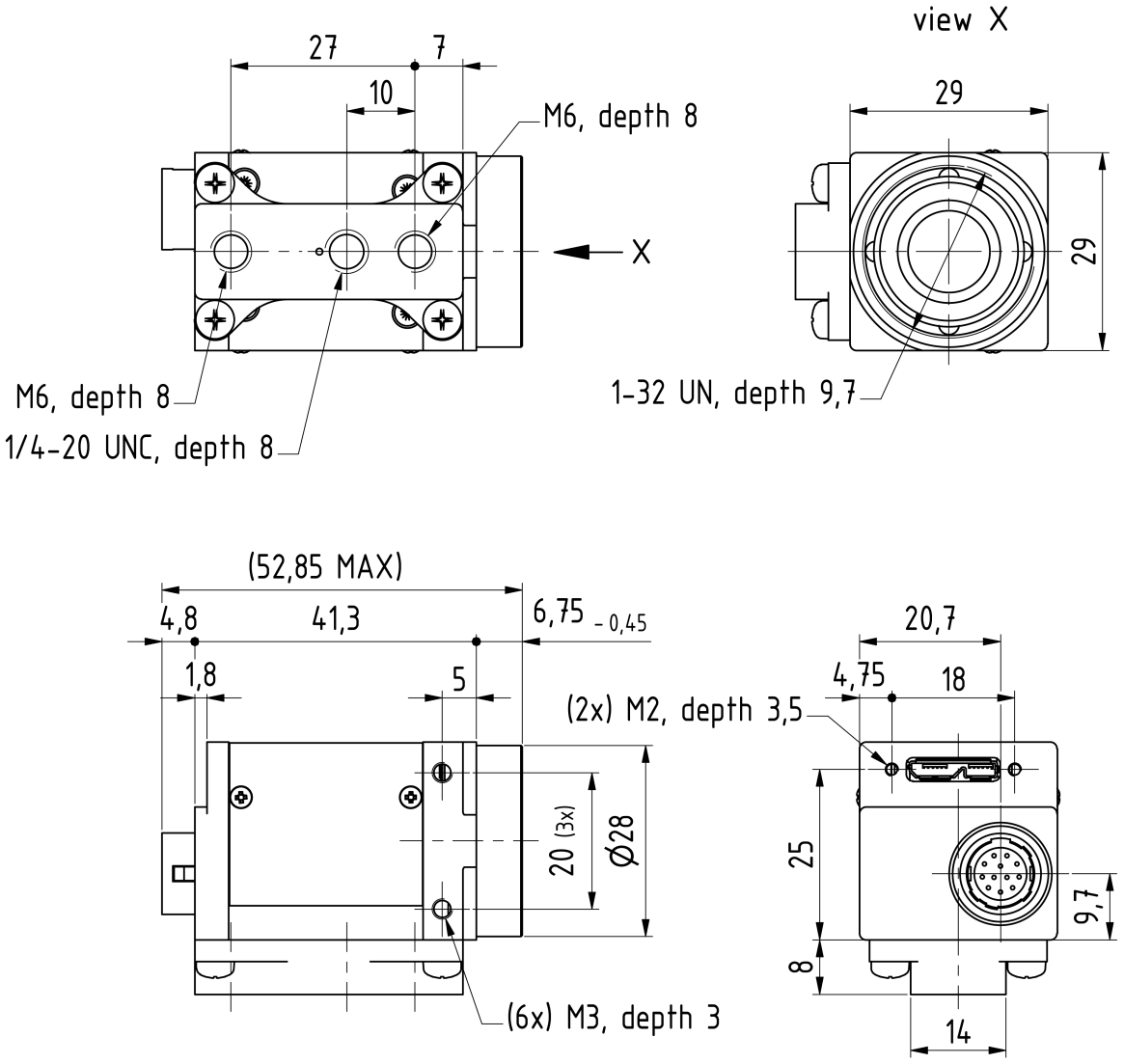

2.2 DFK 33UX249 C-Mount without Tripod Adapter

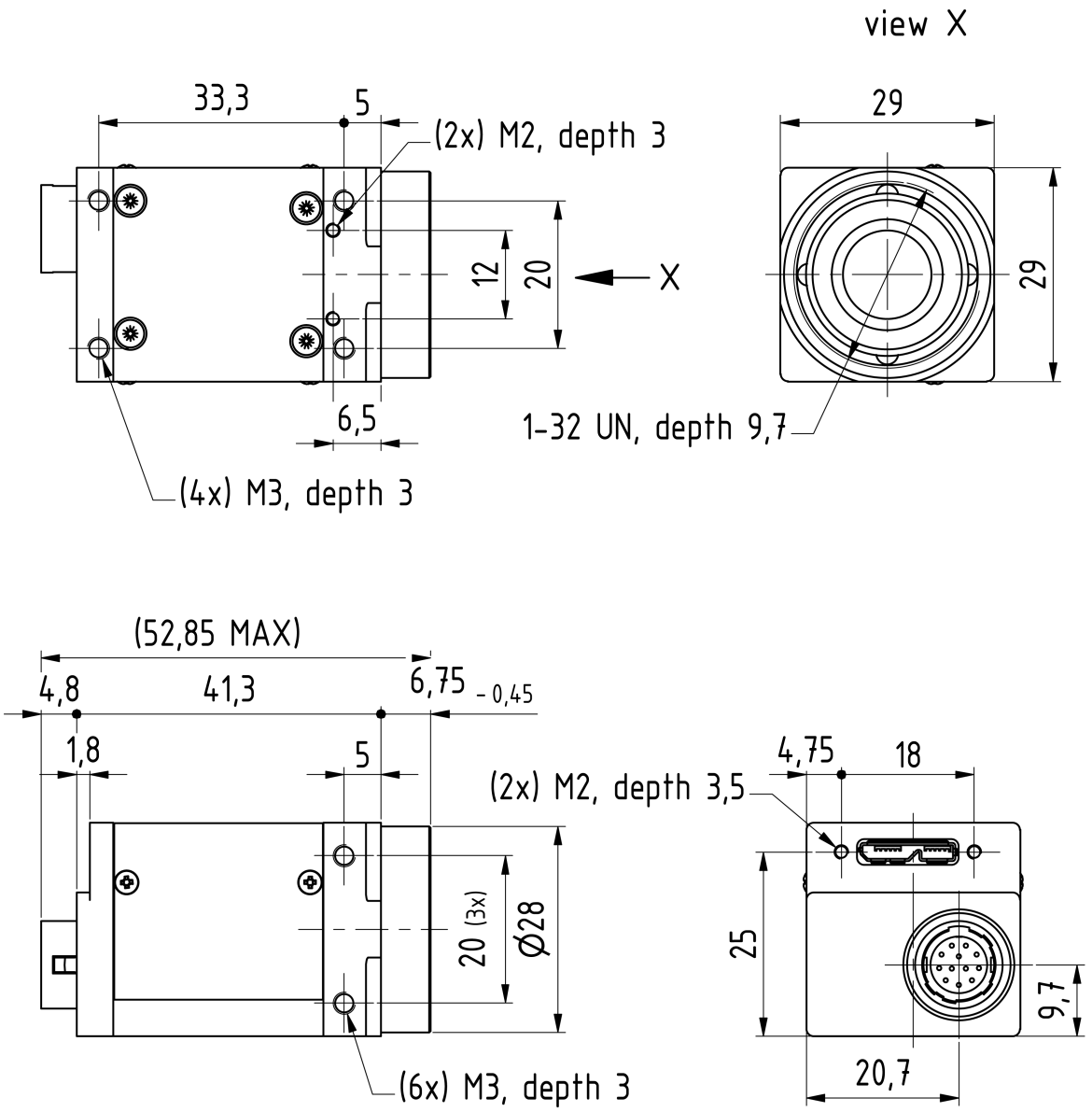

Dimensions: mm
Tolerances: DIN ISO 2768-f

2.3 DFK 33UX249 CS-Mount with Tripod Adapter

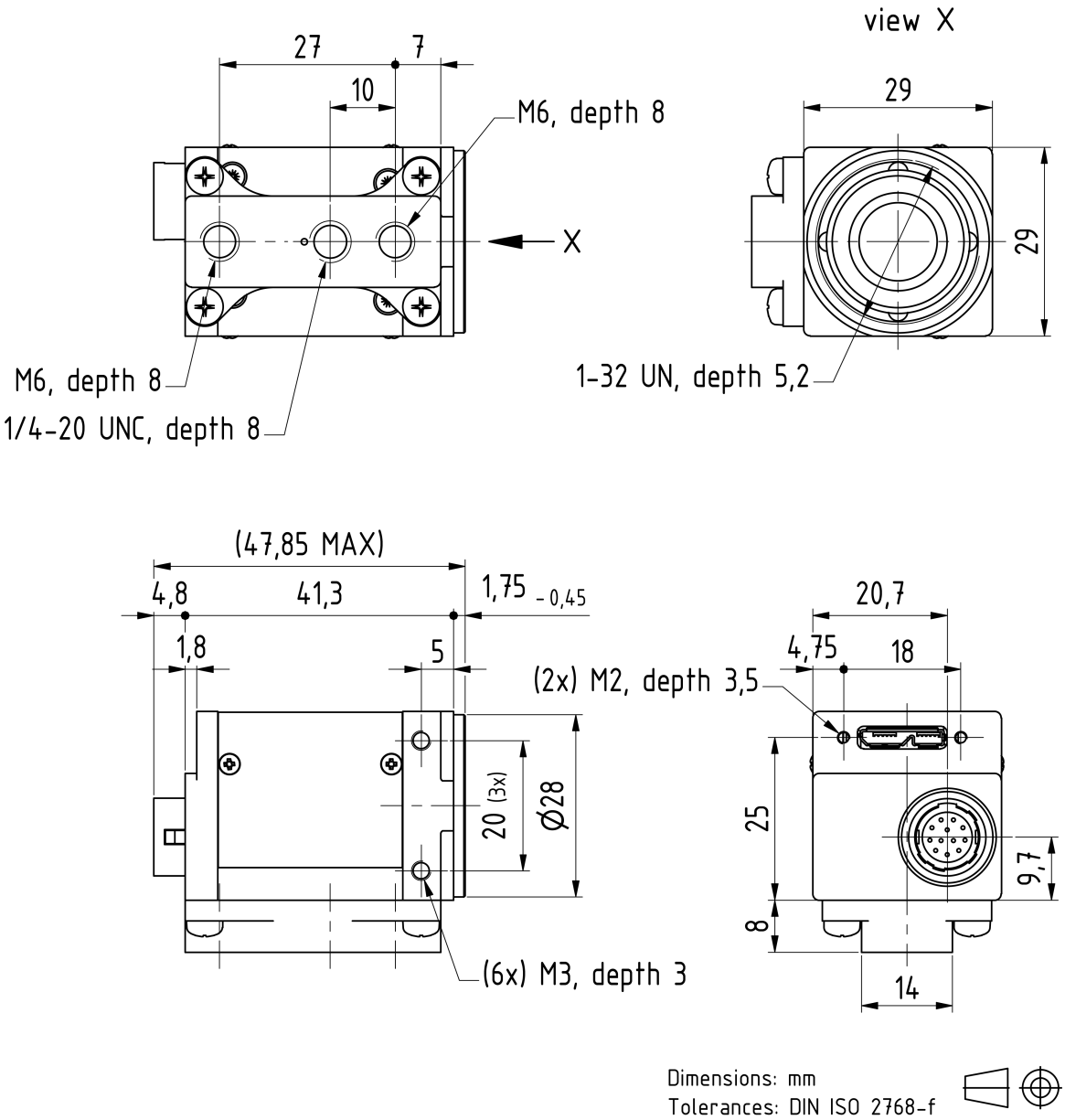

2.4 DFK 33UX249 CS-Mount without Tripod Adapter

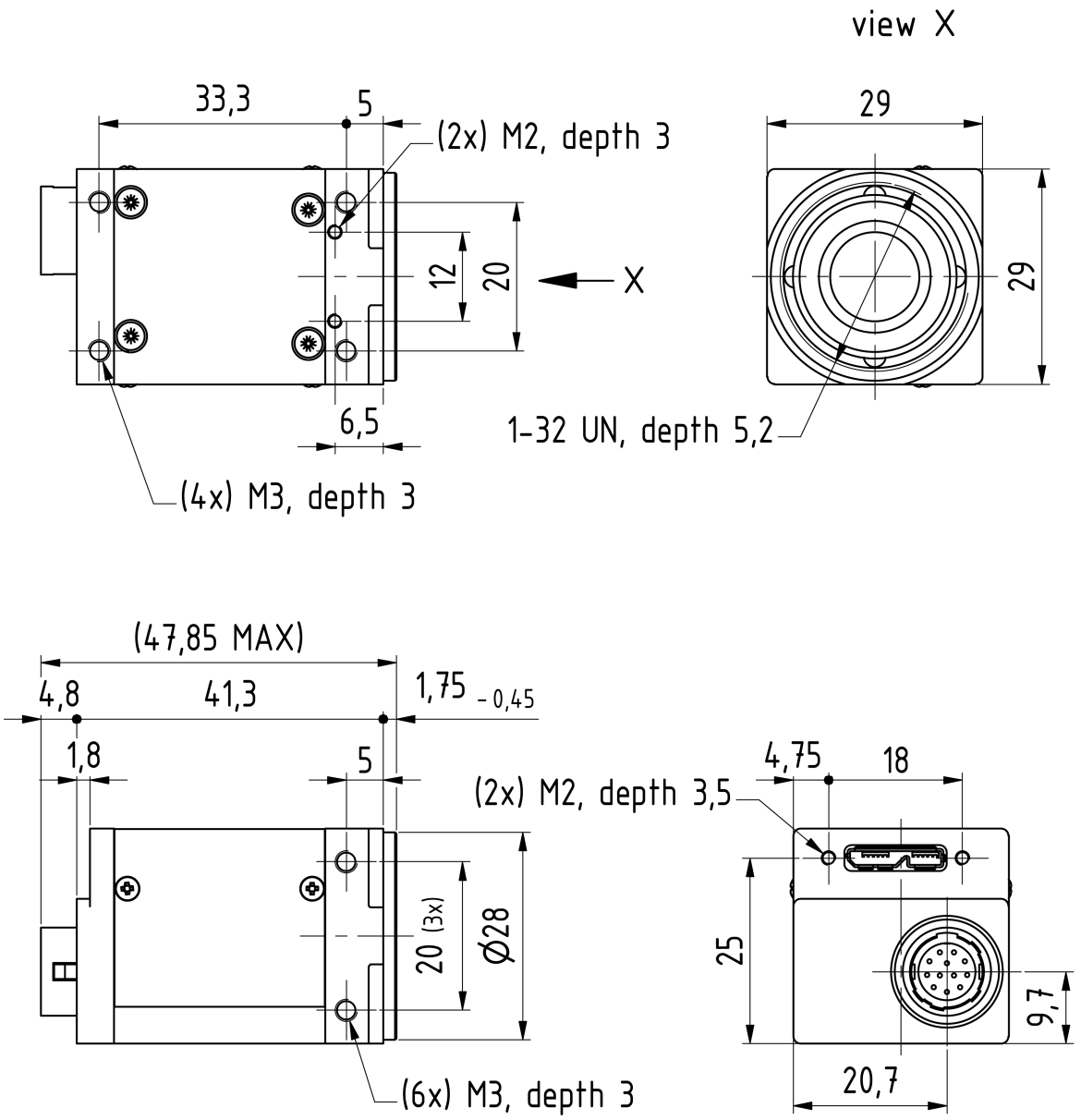

Dimensions: mm
Tolerances: DIN ISO 2768-f

3 I/O Connector

3.1 12-pin I/O Connector

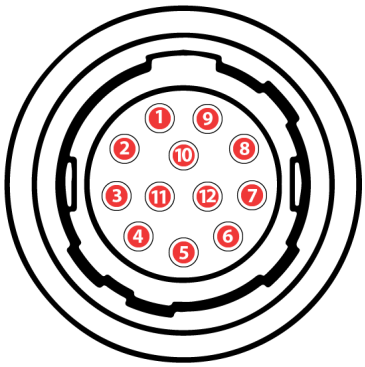

Rear view of camera

Pin	Signal	I/O	Remarks	Characteristics			
				Min	Typ	Max	Unit
1	do not use		-	-	-	-	-
2	do not use		-	-	-	-	-
3	n.c.		-	-	-	-	-
4	n.c.		-	-	-	-	-
5	n.c.		-	-	-	-	-
6	n.c.		-	-	-	-	-
7	GND_I/O	G[3]	External Ground	-	-	-	-
8	n.c.		-	-	-	-	-
9	n.c.		-	-	-	-	-
10	STROBE_OUT	O[3]	Open drain	-	-	24.0[1]	V
11	TRIGGER_IN (+)	I[3]	Optocoupler signal	3.3[2]	-	24.0[2]	V
12	TRIGGER_IN (-)	I[3]	Optocoupler ground	-	-	-	-

[1] max. 0.2A (ID) for open drain MOSFET!

[2] min. 3.5 mA driver strength required!

[3] G: Ground O: Output I: Input

The part number of this Hirose connector is HR10A10R-12P(73). To create an I/O cable you need a Hirose connector HR10A-10P-12S(73).

3.1.1 TRIGGER_IN

The *TRIGGER_IN* line can be used to synchronize the start of the exposure time with external events. The Trigger section describes in detail how the image sensor's behavior can be controlled.

The current input signal can also be read directly through the General Purpose Input feature.

3.1.2 STROBE_OUT

The *STROBE_OUT* line's main usage is to indicate the integration time of the image sensor which allows flashes, strobes or other light sources to be synchronized with camera operation. The line's behavior can be controlled through the Strobe controls.

The output signal can also be directly controlled through the General Purpose Output feature.

4 Spectral Characteristics

4.1 IR-Cut Filter

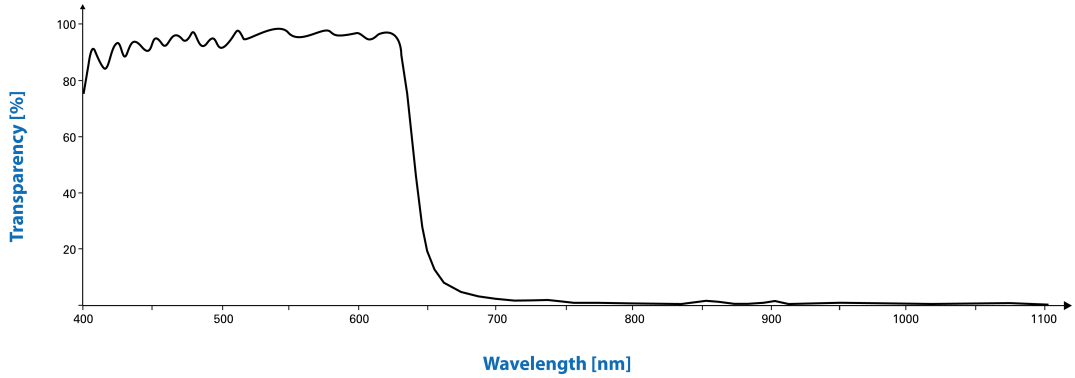

4.2 Spectral Sensitivity - IMX249LQJ-C

Sensor: Sony IMX174/249 - courtesy of Sony Deutschland GmbH

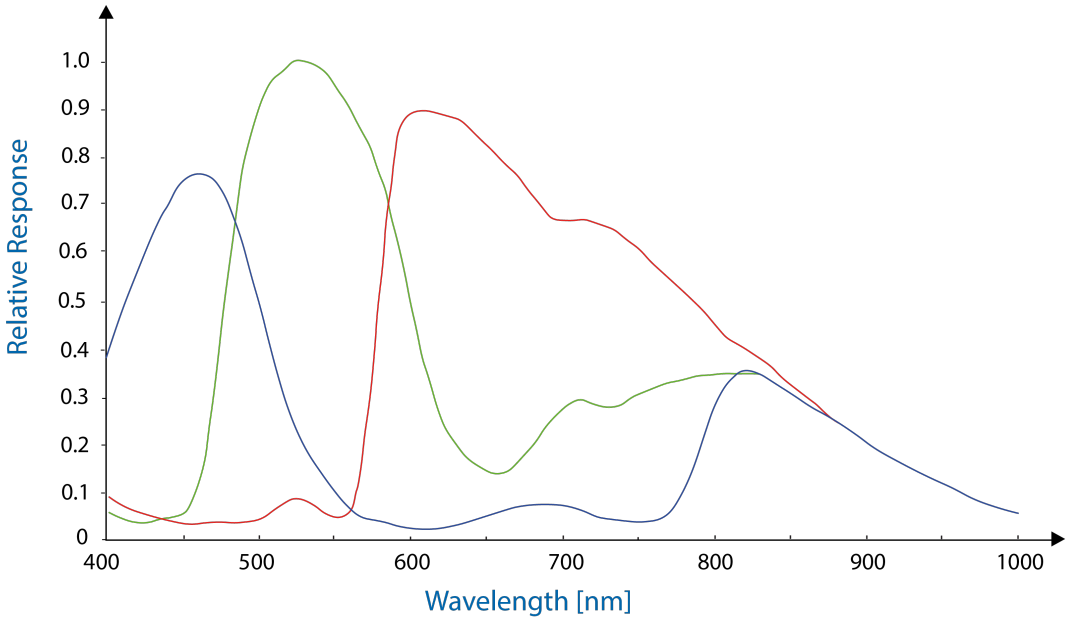

5 Camera Controls

This section describes the parameters available for the DFK 33UX249 camera.

The actual name of the parameter depends on the driver technology used to access the camera. Parameter names are listed for the most common ways to access the cameras:

- *USB3 Vision* (*IC Imaging Control 4*, or via 3rd party driver)
- UVC/V4L2 (on Linux, via uvcvideo)
- *IC Imaging Control 3.x* (on Windows, via *Device Driver for The Imaging Source USB 33U, 37U and 38U Cameras*)

Please note: When the camera is connected to a USB2 controller and used in V4L2 mode or by *IC Imaging Control 3.x*, read requests can lead to frame drops. Avoid reading camera features to ensure a stable image transmission.

5.1 Sensor Readout Control

5.1.1 Pixel Format

The pixel format defines the data type of the pixels transmitted to the computer. The bits per pixel needed for a particular pixel format influence the required bandwith.

The driver technology used to access the camera significantly impacts the way the pixel format is controlled:

- When using *IC Imaging Control 4* or *USB3 Vision*, the pixel format is controlled through the `PixelFormat` *GenICam* feature.
- When using the uvcvideo driver on Linux, the pixel format is defined by video4linux2.
- When using *IC Imaging Control 3.x*, the pixel format is part of the video format - a parameter which combines pixel format, resolution and readout mode. For more information, refer to the *IC Imaging Control 3.x* documentation sections on `VideoFormat` and `VideoFormatDesc`.

The DFK 33UX249 color camera supports multiple pixel formats with variable bits-per-pixel settings. The names of the pixel formats and the way to select them depends on the driver used to control the camera. The following table contains a short overview of all possible formats followed by a more detailed description.

Pixel Format	Bits Per Pixel	USB3 Vision	UVC	TIS UVC Driver
8-Bit Bayer (GB)	8	BayerGB8	GBRG	RGB32, Y800
16-Bit Bayer (GB)	16	BayerGB16	GB16	RGB64, Y16
YUV 4:2:2	16	YCbCr422_8	YUY2	YUY2
YUV 4:1:1 (a)	12	YCbCr411_8		
YUV 4:1:1 (b)	12	YCbCr411_8_CbYYCrYY	Y411	Y411
RGB24	24	BGR8	RGB24	RGB24
8-Bit Monochrome	8	Mono8		

5.1.1.1 8-Bit Bayer Raw

This format transmits data using one byte for each pixel.

USB3 Vision drivers see this pixel format as one of the 8-bit bayer raw formats (BayerGR8, BayerRG8, BayerGB8, BayerBG8).

UVC drivers see it with the *FourCC* GRBG, RGGB, GBRG or BA81.

The *Device Driver for The Imaging Source USB 33U, 37U and 38U Cameras* simplifies this variety of possible pixel formats and offers two video formats instead: RGB32 and Y800. The RGB32 format results from the driver's automatic debayering of the raw image data, while the Y800 format contains the raw data which is reinterpreted as monochrome.

5.1.1.2 16-Bit Bayer Raw

This format transmits data using 2 bytes for each pixel.

The sensor of the DFK 33UX249 camera is not able to provide 16-bit data output. The pixel data is transmitted in the most significant bits. This allows application programs to ignore the sensor-specific data type and to treat the data as if the sensor outputs 16 bits.

USB3 Vision drivers see this pixel format as one of the 16-bit packed bayer raw formats (BayerGR16, BayerRG16, BayerGB16, BayerBG16).

UVC drivers see it with the *FourCC* GR16, RG16, GB16 or BA16.

The *Device Driver for The Imaging Source USB 33U, 37U and 38U Cameras* simplifies this variety of possible pixel formats and offers two video formats instead: RGB64 and Y16. The RGB64 format results from the driver's automatic debayering the raw image data, while the Y16 format contains the raw data which is reinterpreted as monochrome.

5.1.1.3 YUV 4:2:2

This format transmits an 8-bit luminance value for every pixel and a pair of chrominance values for every two pixels.

The camera converts the raw pixel data from the sensor to YUV 4:2:2. Since YUV 4:2:2 averages to 2 bytes per pixel, the YUV 4:2:2 pixel format requires two times the bandwidth of the 8-bit raw format, thus reducing the maximum possible frame rate.

USB3 Vision drivers see this pixel format as `YCbCr422_8`.

UVC drivers see it with the *FourCC* `YUY2`.

The *Device Driver for The Imaging Source USB 33U, 37U and 38U Cameras* offers this pixel format as the `YUY2` video format.

5.1.1.4 YUV 4:1:1

This format transmits an 8-bit luminance value for every pixel and a pair of chrominance values for every four pixels.

The two YUV 4:1:1 pixel formats only differ in their byte order.

The camera converts the raw pixel data from the sensor to YUV 4:2:2. Since YUV 4:2:2 averages to 1.5 bytes per pixel, the YUV 4:2:2 pixel format requires two 50% more bandwidth than the 8-bit raw format, thus reducing the maximum possible frame rate.

USB3 Vision drivers see this pixel format as `YCbCr411_8` and `YCbCr411_8_CbYYCrYY`.

UVC drivers see it with the *FourCC* `Y411`.

The *Device Driver for The Imaging Source USB 33U, 37U and 38U Cameras* offers this pixel format as the `Y411` video format.

5.1.1.5 RGB24

The camera converts the raw pixel data from the sensor to RGB24. Since RGB24 uses 3 bytes to store 1 pixel, the RGB24 pixel format requires three times the bandwidth of the 8-bit raw format, thus reducing the maximum possible frame rate.

USB3 Vision drivers enumerate this pixel format as `BGR8`.

UVC drivers see it with the *FourCC* `RGB24`.

The *Device Driver for The Imaging Source USB 33U, 37U and 38U Cameras* enumerates this pixel format as the `RGB24` video format.

5.1.1.6 8-Bit Monochrome

The camera generates the pixel data by debayering the raw pixel data and transmitting only the luminance information.

USB3 Vision drivers enumerate this pixel format as `Mono8`.

UVC drivers do not have access to this format.

5.1.2 Resolution

The DFK 33UX249 allows the user to specify which rectangular region of the image sensor to read out during camera operation. The size of this rectangle determines the number of

pixels that have to be transferred for each frame and has a significant influence on the required USB bandwidth.

Lowering the resolution also often allows the image sensor to operate at a higher frame rate. Changes in the vertical resolution have more effect on the maximum frame rate than changes in the horizontal direction.

The way the resolution is controlled varies greatly between the driver technology used to access the camera:

- When using *USB3 Vision*, the resolution is controlled through the GenICam features Width and Height.
- When using the uvcvideo on Linux, the resolution is selected from a list of fixed formats. Dynamic frame sizes are not available.
- When using *IC Imaging Control*, the resolution is part of the video format, a parameter that combines pixel format, resolution and readout mode. For more information, refer to the *IC Imaging Control* documentation sections on `VideoFormat` and `VideoFormatDesc`.

Parameter	**Horizontal Resolution**
Minimum	256
Maximum	1920
Increment	16
USB3 Vision: GenICam	`Width`
Type	Integer

Parameter	**Vertical Resolution**
Minimum	256
Maximum	1200
Increment	2
USB3 Vision: GenICam	`Height`
Type	Integer

5.1.3 Frame Rate

The frame rate is specified in frames per second and determines the camera's operating speed.

The way the frame rate is controlled depends greatly upon which driver technology is used to access the camera:

- When using *USB3 Vision*, the frame rate is controlled through the *GenICam* feature `AcquisitionFrameRate`.

- When using uvcvideo on Linux, the frame rate is selected from a list of available frame rates.
- When using IC Imaging Control, the frame rate is selected from a list of available frame rates through APIs such as `Grabber::setFPS` or `ICImagingControl.DeviceFrameRate`.

The range of available frame rates depends upon other camera settings such as well, pixel format, resolution and readout modes.

Parameter	Frame Rate
Minimum	Depending on Pixel Format, Resolution, and Readout Mode
Maximum	Depending on Pixel Format, Resolution, and Readout Mode
USB3 Vision: GenICam	`AcquisitionFrameRate`
Type	Float

Please note: Enabling Device Link Throughput Limit Mode can limit the frame rate below the configured value.

The following tables show the maximum frame rate for some combinations of pixel format and resolution.

8-Bit Bayer Raw

Width	Height	Maximum Frame Rate
1920	1200	48
1920	1080	53
640	480	309

16-Bit Bayer Raw

Width	Height	Maximum Frame Rate
1920	1200	40
1920	1080	44
640	480	269

YUV 4:2:2

Width	Height	Maximum Frame Rate
1920	1200	48
1920	1080	54
640	480	309

YUV 4:1:1 (a)

Width	Height	Maximum Frame Rate
1920	1200	48
1920	1080	54
640	480	309

YUV 4:1:1 (b)

Width	Height	Maximum Frame Rate
1920	1200	48
1920	1080	54
640	480	309

RGB24

Width	Height	Maximum Frame Rate
1920	1200	48
1920	1080	53
640	480	309

8-Bit Monochrome

Width	Height	Maximum Frame Rate
1920	1200	48
1920	1080	53
640	480	309

5.1.4 Partial Scan Offset

If the selected resolution is smaller than the sensor size, the part of the sensor that is actually read out can be specified by the *Partial Scan Offset X* and *Partial Scan Offset Y*

parameters. By default, the camera automatically positions the offsets so that the center of the sensor is used.

Parameter	Partial Scan Offset X
Minimum	0
Maximum	1664
Increment	2
USB3 Vision: GenICam	`OffsetX`
Type	Integer
Video4Linux2	`ROI Offset X`
VCD Property	`VCDID_PartialScanOffset \VCDElement_PartialScanOffsetX`

Parameter	Partial Scan Offset Y
Minimum	0
Maximum	944
Increment	2
USB3 Vision: GenICam	`OffsetY`
Type	Integer
Video4Linux2	`ROI Offset Y`
VCD Property	`VCDID_PartialScanOffset \VCDElement_PartialScanOffsetY`

If *Partial Scan Offset X* or *Partial Scan Offset Y* is configured to a value that would be invalid with the current setting of Resolution setting, the camera uses the maximum possible value.

Parameter	Partial Scan Auto Center
`On`	Automatically configure Partial Scan Offset X/Y so that the center area of the sensor is read out
`True`	
`Off`	Control Partial Scan Offset X/Y manually
`False`	
USB3 Vision: GenICam	`OffsetAutoCenter`
Type	Boolean
Video4Linux2	`ROI Auto Center`
VCD Property	`VCDID_PartialScanOffset \VCDElement_PartialScanAutoCenter`

5.1.5 Image Flipping

The DFK 33UX249 camera allows flipping of the image data horizontally, vertically, or both. The *Flip Horizontal* and *Flip Vertical* parameters can be used to control this sensor feature.

Parameter	Flip Horizontal
`True`	Image data is flipped horizontally
`False`	Image data is not flipped horizontally
USB3 Vision: GenICam	`ReverseX`
Type	Boolean
Video4Linux2	`Flip Horizontal`
VCD Property	`VCDID_FlipHorizontal\VCDElement_Value`

Parameter	Flip Vertical
`True`	Image data is flipped vertically
`False`	Image data is not flipped vertically
USB3 Vision: GenICam	`ReverseY`
Type	Boolean
Video4Linux2	`Flip Vertical`
VCD Property	`VCDID_FlipVertical\VCDElement_Value`

5.2 Image Sensor Control

5.2.1 Exposure Time

The *Exposure Time* parameter defines the time the camera opens its (electronic) shutter when it is taking an image.

Parameter	Exposure Time
Minimum	30 µs
Maximum	30 s
Default	auto
USB3 Vision: GenICam	`ExposureTime`
Type	Float
Video4Linux2	`Exposure Time (us)`
VCD Property	`VCDID_Exposure\VCDElement_Value`

5.2.2 Gain

The *Gain* parameter defines the amplification that is applied to the image at sensor level.

Parameter	Gain
Minimum	0 dB
Maximum	48 dB
Default	auto
USB3 Vision: GenICam	`Gain`
Type	Float
Video4Linux2	`Gain (db/100)`
VCD Property	`VCDID_Gain\VCDElement_Value`

5.2.3 Black Level

The *Black Level* parameter defines the lowest possibly intensity value of the image sensor.

Parameter	Black Level
Minimum	0
Maximum	511
Default	240
USB3 Vision: GenICam	`BlackLevel`
Type	Float
Video4Linux2	`Brightness`
VCD Property	`VCDID_Brightness\VCDElement_Value`

5.3 Automatic Exposure and Gain Control

The DFK 33UX249 camera can automatically control gain and exposure time. These automatic functions are enabled by default.

In order to optimize image parameters, a region of interest can be specified for automatic functions. Specifying a region of interest enables fine-grained control over the image area for which the image parameters are optimized. A selection of pre-defined area presets is available, but the user can also specify the coordinates of a custom rectangle.

In certain situations, it is desirable to limit the range of the auto-controlled parameters. For example, one might want to avoid high gain settings in order to keep noise levels low. Other applications require limiting the maximum exposure time so that movements do not get blurred. Therefore, the ranges of the gain and exposure parameter can be limited.

If both auto exposure and auto gain are active, the camera tries to lower the gain value in order to reduce noise and improve the image quality.

5.3.1 Auto Exposure

Parameter	Auto Exposure
`Continuous`	Enable Auto Exposure
`True`	
`Off`	Disable Auto Exposure
`False`	
USB3 Vision: GenICam	`ExposureAuto`
Type	Enumeration
Video4Linux2	`Auto Shutter`
VCD Property	`VCDID_Exposure\VCDElement_Auto`

5.3.2 Auto Gain

Parameter	Auto Gain
`Continuous`	Enable Auto Gain
`True`	
`Off`	Disable Auto Gain
`False`	
USB3 Vision: GenICam	`GainAuto`
Type	Enumeration
Video4Linux2	`Auto Gain`
VCD Property	`VCDID_Gain\VCDElement_Auto`

5.3.3 Auto Reference Value

The *Auto Reference Value* parameter specifies the target brightness for both auto exposure and auto gain.

Parameter	Auto Reference Value
Minimum	0
Maximum	255
Default	128
USB3 Vision: GenICam	`ExposureAutoReference`
Type	Integer
Video4Linux2	`ExposureAutoReference`
VCD Property	`VCDID_Exposure\VCDElement_AutoReference`

5.3.4 Highlight Reduction

Enabling *Highlight Reduction* lets the auto exposure and auto gain functions reduce overexposed areas in the output image. This feature is particularly useful when using 10/12/16-bit output images and a tone mapping algorithm in post-processing when using higher bit depths as the dark areas still contain a lot of useful information.

Parameter	Highlight Reduction
`True`	Try to reduce overexposed areas
`False`	Ignore overexposed areas and focus on matching the image brightness to the selected Auto Reference Value.
USB3 Vision: GenICam	`ExposureAutoHighlightReduction`
Type	Boolean
Video4Linux2	`Highlight Reduction`
VCD Property	`VCDID_HighlightReduction\VCDElement_Value`

5.3.5 Auto Exposure Limits

The *Auto Exposure Lower Limit* parameter determines the minimum possible value that can be set by the auto exposure algorithm.

Parameter	Auto Exposure Lower Limit
Minimum	30 µs
Maximum	1 s
USB3 Vision: GenICam	`ExposureAutoLowerLimit`
Type	Float
Video4Linux2	`Exposure Auto Lower Limit`

The *Auto Exposure Upper Limit* parameter determines the maximum possible value that can be set by the auto exposure algorithm.

Parameter	Auto Exposure Upper Limit
Minimum	30 µs
Maximum	1 s
USB3 Vision: GenICam	`ExposureAutoUpperLimit`
Type	Float
Video4Linux2	`Exposure Auto Upper Limit`
VCD Property	`VCDID_Exposure\VCDElement_AutoMaxValue`

If the *Auto Exposure Upper Limit Auto* parameter is enabled, the value of *Auto Exposure Upper Limit* is automatically kept at the maximum possible value for the current frame rate.

Parameter	Auto Exposure Upper Limit Auto
`On`	Select *Auto Exposure Upper Limit* automatically
`Off`	Let the user control *Auto Exposure Upper Limit*
USB3 Vision: GenICam	`ExposureAutoUpperLimitAuto`
Type	Enumeration
Video4Linux2	`Exposure Auto Upper Limit Auto`
VCD Property	`VCDID_Exposure\VCDElement_AutoMaxValueAuto`

5.3.6 Auto Gain Limits

The *Auto Gain Lower Limit* parameter determines the minimum possible value that can be set by the auto gain algorithm.

Parameter	Auto Gain Lower Limit
Minimum	0 dB
Maximum	48 dB
USB3 Vision: GenICam	`GainAutoLowerLimit`
Type	Float
Video4Linux2	`Gain Auto Lower Limit`

The *Auto Gain Upper Limit* parameter determines the maximum possible value that can be set by the auto gain algorithm.

Parameter	Auto Gain Upper Limit
Minimum	0 dB
Maximum	48 dB
USB3 Vision: GenICam	`GainAutoUpperLimit`
Type	Float
Video4Linux2	`Gain Auto Upper Limit`

5.4 Trigger

The trigger mode can be used to take images at very specific points in time which are specified by an electrical signal connected to the TRIGGER_IN pin of the I/O connector of the camera.

5.4.1 Trigger Mode

The *Trigger Mode* parameter enables the trigger mode.

Parameter	Trigger Mode
`On`	Enable Trigger Mode
`True`	
`Off`	Disable Trigger Mode
`False`	
USB3 Vision: GenICam	`TriggerMode`
Type	Enumeration
Video4Linux2	`Trigger Mode`
VCD Property	`VCDID_Trigger\VCDElement_Value`

5.4.2 Trigger Polarity

The *Trigger Polarity* parameter controls whether a trigger event is accepted on the rising or falling edge of the signal connected to the TRIGGER_IN line.

Parameter	Trigger Polarity
`RisingEdge`	Accept rising edge as trigger signal
`True`	
`FallingEdge`	Accept falling edge as trigger signal
`False`	
USB3 Vision: GenICam	`TriggerActivation`
Type	Enumeration
Video4Linux2	`Trigger Polarity`
VCD Property	`VCDID_Trigger\VCDElement_Polarity`

5.4.3 Software Trigger

The *Software Trigger* function can be used to simulate a trigger pulse, in turn causing one image to be exposed and delivered to the host computer.

Parameter	Software Trigger
Execute	Simulate one trigger pulse
USB3 Vision: GenICam	`TriggerSoftware`
Type	Command
Video4Linux2	`Software Trigger`
VCD Property	`VCDID_Trigger\VCDElement_SoftwareTrigger`

5.4.4 Trigger Exposure Mode

The *Trigger Exposure Mode* parameter sets the way in which the exposure time is controlled in trigger mode. By default, the exposure time is controlled through the Exposure Time parameter. The exposure time can also be controlled by the time the TRIGGER_IN line is kept in active state.

Parameter	Trigger Exposure Mode
`FrameStart`	The exposure time is controlled by the Exposure Time parameter
`Timed`	
`ExposureActive`	The exposure time is controlled by the pulse length on the TRIGGER_IN pin
`Trigger Width`	
USB3 Vision: GenICam	`TriggerSelector`
Type	Enumeration
Video4Linux2	`Trigger Exposure Mode`
VCD Property	`VCDID_Trigger\VCDElement_TriggerExposureMode`

5.4.5 Trigger Burst Count

The *Trigger Burst Count* parameter allows the camera to be configured to take more than one image per trigger pulse. By default, this parameter is set to 1 so that exactly one image is acquired. The images are taken as rapidly as possible given current settings (i.e. as limited by the current exposure time and frame rate settings).

Parameter	Trigger Burst Count
Minimum	1
Maximum	65535
Default	1
USB3 Vision: GenICam	`AcquisitionBurstFrameCount`
Type	Integer
Video4Linux2	`Trigger Burst Count`
VCD Property	`VCDID_Trigger\VCDElement_TriggerBurstCount`

5.4.6 Trigger Source

The *Trigger Source* parameter allows the camera to be configured to only accept trigger signals from a specified source, e.g. only software trigger.

Parameter	Trigger Source
`Any`	Allow trigger signals from any source
`Line1`	Allow only hardware trigger
`Software`	Allow only software trigger
USB3 Vision: GenICam	`TriggerSource`
Type	Enumeration

5.4.7 Trigger Overlap

The *Trigger Overlap* feature gives information on when a new trigger pulse is accepted in the trigger -> exposure -> readout sequence.

Parameter	Trigger Overlap
`Off`	The next trigger pulse is only accepted once the previous frame has been read out from the sensor
`Readout`	The next trigger pulse is accepted during readout as long as the remaining readout time is shorter than the exposure time
USB3 Vision: GenICam	`TriggerOverlap`
Type	Enumeration
VCD Property	`VCDID_Trigger\VCDElement_TriggerOverlap`

5.4.8 Trigger Delay

The *Trigger Delay* parameter specifies a time for which the camera waits between receiving a trigger signal and starting the exposure of an image. Simulated trigger pulses generated through the *Software Trigger* function are not delayed by this parameter.

Parameter	Trigger Delay
Minimum	0 s
Maximum	1 s
USB3 Vision: GenICam	`TriggerDelay`
Type	Float
Video4Linux2	`Trigger Delay`
VCD Property	`VCDID_Trigger\VCDElement_TriggerDelay`

5.5 Trigger Timing Parameters

The 33U series camera series offers several options for dealing with bad trigger signals. By using the *Debounce Time*, *Denoise Time* and *Mask Time* parameters, the camera can be configured to ignore pulses on its TRIGGER_IN line under certain conditions.

Useful values for these parameters are application-specific. They depend on the expected trigger frequency, the exposure time and assumptions about the input signal quality.

The default values for all these parameters is 0 µs, assuming perfect signal quality.

5.5.1 Trigger Debounce Time

The *Trigger Debounce Time* parameter specifies the time for which the trigger input has to be low in order for the next trigger signal to be accepted.

Parameter	Trigger Debounce Time
Minimum	0 s
Maximum	1 s
Default	0 s
USB3 Vision: GenICam	`TriggerDebouncer`
Type	Float
Video4Linux2	`Trigger Debounce Time (us)`
VCD Property	`VCDID_Trigger\VCDElement_TriggerDebouncer`

5.5.2 Trigger Mask Time

The *Trigger Mask Time* parameter specifies the time for which trigger pulses are ignored after accepting a trigger signal.

Parameter	Trigger Mask Time
Minimum	0 s
Maximum	1 s
Default	0 s
USB3 Vision: GenICam	`TriggerMask`
Type	Float
Video4Linux2	`Trigger Mask Time (us)`
VCD Property	`VCDID_Trigger\VCDElement_TriggerMask`

5.5.3 Trigger Noise Suppression Time

The *Trigger Noise Suppression Time* parameter specifies the time for which trigger input has to be active in order to be accepted as a trigger signal.

Parameter	Trigger Noise Suppression Time
Minimum	0 s
Maximum	1 s
Default	0 s
USB3 Vision: GenICam	`TriggerDenoise`
Type	Float
Video4Linux2	`Trigger Noise Suppression Time`
VCD Property	`VCDID_Trigger\VCDElement_TriggerDenoise`

5.6 Digital I/O

The 33U series has one digital input and one digital output. The digital input can be used as a Trigger input but the current status can also examined directly.

The digital output can be configured as a Strobe output to signal the exact moment when the image sensor is sensitive to light so that external light sources can be synchronized to its operation cycle.

5.6.1 General Purpose Input

The *General Purpose Input* parameter allows the current status of the TRIGGER_IN pin.

Parameter	General Purpose Input
`True`	TRIGGER_IN line status is low
`1`	
`False`	TRIGGER_IN line status is high
`0`	
USB3 Vision: GenICam	`GPIn`
Type	Boolean
Video4Linux2	`GPIN`
VCD Property	`VCDID_GPIO\VCDElement_GPIORead` `VCDID_GPIO\VCDElement_GPIOIn`

5.6.2 General Purpose Output

The *General Purpose Output* parameter controls the status of the STROBE_OUT pin.

Parameter	General Purpose Output
`True`	Drive the STROBE_OUT line high
`1`	
`False`	Drive the STROBE_OUT line low
`0`	
USB3 Vision: GenICam	`GPOut`
Type	Boolean
Video4Linux2	`GPOUT`
VCD Property	`VCDID_GPIO\VCDElement_GPIOWrite` `VCDID_GPIO\VCDElement_GPIOOut`

5.7 Strobe

The strobe function controls the automatic generation of output pulses on the STROBE_OUT pin which is synchronized to the image sensor's exposure time.

5.7.1 Strobe Enable

The *Strobe Enable* parameter enables the automatic generation of strobe pulses.

Parameter	Strobe Enable
`On`	Strobe enabled
`True`	
`Off`	Strobe disabled
`False`	
USB3 Vision: GenICam	`StrobeEnable`
Type	Enumeration
Video4Linux2	`Strobe Enable`
VCD Property	`VCDID_Strobe\VCDElement_Value`

5.7.2 Strobe Polarity

The *Strobe Polarity* parameter can be used to invert the strobe pulse output.

Parameter	Strobe Polarity
`ActiveHigh`	The STROBE_OUT pin is logically high during the exposure time
`True`	
`ActiveLow`	The STROBE_OUT pin is logically low during the exposure time
`False`	
USB3 Vision: GenICam	`StrobePolarity`
Type	Enumeration
Video4Linux2	`Strobe Polarity`
VCD Property	`VCDID_Strobe\VCDElement_StrobePolarity`

5.7.3 Strobe Operation

The *Strobe Operation* parameter specifies how the length of the strobe pulses are controlled.

Parameter	Strobe Operation
`Exposure`	Output pulse duration is equal to the current exposure time
`True`	
`FixedDuration`	Output pulse duration is specified by *Strobe Duration*
`False`	
USB3 Vision: GenICam	`StrobeOperation`
Type	Enumeration
Video4Linux2	`Strobe Exposure`
VCD Property	`VCDID_Strobe\VCDElement_StrobeMode`

5.7.4 Strobe Duration

The *Strobe Duration* parameter controls the length of the strobe pulses if *Strobe Operation* is set to use the fixed duration mode.

Parameter	Strobe Duration
Minimum	0 µs
Maximum	32767 µs
USB3 Vision: GenICam	`StrobeDuration`
Type	Integer
Video4Linux2	`Strobe Duration`
VCD Property	`VCDID_Strobe\VCDElement_StrobeDuration`

5.7.5 Strobe Delay

The *Strobe Delay* parameter can be used to add a small delay between the start of exposure and the strobe output pulse.

Parameter	Strobe Delay
Minimum	0 µs
Maximum	32767 µs
USB3 Vision: GenICam	`StrobeDelay`
Type	Integer
Video4Linux2	`Strobe Delay`
VCD Property	`VCDID_Strobe\VCDElement_StrobeDelay`

5.8 White Balance

The DFK 33UX249 color camera can perform white balance by digital multiplication of the appropriate raw pixel values.

5.8.1 Auto White Balance

DFK 33UX249 can perform *Auto White Balance*. It can be enabled continuously when changes in lighting conditions are expected. Under controlled lighting conditions, however, one-time white balance calibration is the recommended approach.

To perform one-time white balance calibration, place a reference white sheet in front of the camera and set `BalanceWhiteAuto` to *Once*. The camera will then find the correct white balance settings for the current light conditions and keep them active until instructed otherwise.

Parameter	Auto White Balance
`Continuous`	Enable automatic white balance
`True`	
`Once`	Enable automatic white balance until the color channels have been balanced once
`One Push`	
`Off`	Disable automatic white balance
`False`	
USB3 Vision: GenICam	`BalanceWhiteAuto`
Type	Enumeration
Video4Linux2	`White Balance Component, Auto`
VCD Property	`VCDID_WhiteBalance\VCDElement_Auto` `VCDID_WhiteBalance\VCDElement_OnePush`

5.8.2 White Balance Mode

The default auto white balance algorithm is *Gray World*. It is selected by setting the *White Balance Mode* accordingly. The *Gray World* algorithm operates under the assumption that the average color of a scene is near gray and adjusts the white balance coefficients so the average color of the resulting image is gray as well. In the case where this assumption is wrong (e.g. the camera is pointing at a blue carpet), the auto white balance algorithm will select coefficients that do not result in a visually accurate image.

To avoid the problems posed by the *Gray World* algorithm, the *Temperature* mode can be used. This mode operates by trying to determine the color temperature of the light source.

Parameter	White Balance Mode
`Gray World`	Use the *Gray World* model
`Temperature`	Use the *Temperature* model
USB3 Vision: GenICam	`BalanceWhiteMode`
Type	Enumeration
Video4Linux2	`Whitebalance Mode`
VCD Property	`VCDID_WhiteBalance` `\VCDElement_WhiteBalanceMode`

To assist the automatic white balance temperature detection, *White Balance Auto Preset* can be used to limit the range of valid color temperatures.

Parameter	White Balance Auto Preset
`Any`	Allow any color temperature
`Auto Warm White`	Limit color temperature to approximately 2500-4000 K
`Auto Cool White`	Limit color temperature to approximately 4000-5800 K
`Auto Daylight`	Limit color temperature to approximately 5700-7500 K
`Auto Deep Shade`	Limit color temperature to approximately 7500-10000 K
USB3 Vision: GenICam	`BalanceWhiteAutoPreset`
Type	Enumeration
Video4Linux2	`Whitebalance Auto Preset`
VCD Property	`VCDID_WhiteBalance \VCDElement_WhiteBalanceAutoPreset`

5.8.3 Manual White Balance

If *Auto White Balance* is not enabled, the amplifiers for the red, green and blue channels can be controlled manually.

Parameter	White Balance Red
Minimum	0
Maximum	3.984375
Default	auto
USB3 Vision: GenICam	`BalanceRatio[BalanceRatioSelector=Red]`
Type	Float
Video4Linux2	`White Balance Red Component`
VCD Property	`VCDID_WhiteBalance \VCDElement_WhiteBalanceRed`

Parameter	White Balance Green
Minimum	0
Maximum	3.984375
Default	auto
USB3 Vision: GenICam	`BalanceRatio[BalanceRatioSelector=Green]`
Type	Float
Video4Linux2	`White Balance Green Component`
VCD Property	`VCDID_WhiteBalance \VCDElement_WhiteBalanceGreen`

Parameter	White Balance Blue
Minimum	0
Maximum	3.984375
Default	auto
USB3 Vision: GenICam	`BalanceRatio[BalanceRatioSelector=Blue]`
Video4Linux2	`White Balance Blue Component`
VCD Property	`VCDID_WhiteBalance \VCDElement_WhiteBalanceBlue`

If *White Balance Mode* is set to *Temperature*, the color temperature can be set directly. Additionally, a light source can be selected from a list of presets.

Parameter	White Balance Temperature
Minimum	2500 K
Maximum	10000 K
Default	auto
Increment	100
USB3 Vision: GenICam	`BalanceWhiteTemperature`
Type	Integer
Video4Linux2	`White Balance Temperature`
VCD Property	`VCDID_WhiteBalance \VCDElement_WhiteBalanceTemperature`

Parameter	White Balance Temperature Preset
Sodium-Vapor Lamp	2500 K
Warm Light	2700 K
Halogen Light	3000 K
Neutral White	3500 K
Cool White Fluorescent Light	4000 K
Cool White/Daylight (CFL)	5000 K
Daylight	6000 K
Cool White LED	7500 K
Blue Sky	10000 K
USB3 Vision: GenICam	BalanceWhiteTemperaturePreset
Type	Enumeration
Video4Linux2	Whitebalance Temperature Preset
VCD Property	VCDID_WhiteBalance \VCDElement_TemperaturePreset

5.9 Image Processing

5.9.1 Gamma

The 33U series cameras can perform gamma correction on the image data. If the pixel format of a color camera is set a YUV mode, gamma correction is applied to the Y channel. In bayer raw and RGB24 modes, all color channels are subject to the same gamma correction.

Parameter	Gamma
Minimum	0.01
Maximum	5.0
Default	1.0
USB3 Vision: GenICam	Gamma
Type	Float
Video4Linux2	Gamma
VCD Property	VCDID_Gamma\VCDElement_Value

5.9.2 Lookup Table

The 33U series allows the user to specify a lookup table (LUT) that can transform pixel values. This lookup table can be used to perform tasks like histogram equalization inside the camera.

If the pixel format of a color camera is set to one of the YUV modes, the lookup table is applied only to the Y channel. In bayer raw and RGB24 modes, all color channels are subject to the same lookup operation.

The lookup table has 257 16-bit entries. The upper 8 bits of the image data are used to select the appropriate entry in the lookup table, while the remaining bits are used to interpolate between the selected entry and one of its neighbors.

The *LUT Enable* feature enables the lookup table.

Parameter	**LUT Enable**
`True`	Enable lookup table operation
`False`	Disable lookup table operation
USB3 Vision: GenICam	`LUTEnable`
Type	Boolean

The lookup table values can be programmed using the *LUT Index* and *LUT Value* features.

Parameter	**LUT Index**
Minimum	0
Maximum	256
USB3 Vision: GenICam	`LUTIndex`
Type	Integer

Parameter	**LUT Value**
Minimum	0
Maximum	65535
USB3 Vision: GenICam	`LUTValue`
Type	Integer

The whole lookup table can be quickly reprogrammed through the *LUT Value All* feature.

Parameter	LUT Value All
`Value`	1028 bytes of memory containing 257 LUT entries. Each 16-bit LUT entry is aligned on a 32-bit boundary
USB3 Vision: GenICam	`LUTValueAll`
Type	Register

Important: Since gamma correction is implemented using the same hardware as the lookup table, gamma correction is disabled when the lookup table is enabled.

5.10 Color Processing

The DFK 33UX249 color camera allows color adjustments with the *Hue* and *Saturation* parameters. These adjustments work with all output pixel formats.

Important: When a bayer raw pixel format is selected, *Hue* and *Saturation* still work. However, when at least one of them is enabled (set to non-default value), the resulting image is slightly blurred because of the way these parameters are implemented internally.

5.10.1 Hue

The *Hue* parameter controls the color angle of the output image.

Parameter	Hue
Minimum	-180
Maximum	180
Default	0
USB3 Vision: GenICam	`Hue`
Type	Float
Video4Linux2	`Hue`
VCD Property	`VCDID_Hue\VCDElement_Value`

5.10.2 Saturation

The *Saturation* parameter controls the color saturation of the output image.

Parameter	Saturation
Minimum	0
Maximum	255
Default	64
USB3 Vision: GenICam	`Saturation`
Type	Float
Video4Linux2	`Saturation`
VCD Property	`VCDID_Saturation\VCDElement_Value`

5.11 Region of Interest for Auto Functions

The 33U series cameras allow for the setting of a region of interest that is used while controlling the Auto Exposure, Auto Gain and Auto White Balance functions.

5.11.1 Auto Functions ROI Enable

The *Auto Functions ROI Enable* parameter allows for the use of a region of interest for auto functions.

Parameter	Auto Functions ROI Enable
`True`	Auto functions only take a specified part of the image into account
`False`	Auto functions look at the whole image
USB3 Vision: GenICam	`AutoFunctionsROIEnable`
Type	Boolean
Video4Linux2	`Auto Functions ROI Enable`
VCD Property	`VCDID_AutoRoi\VCDElement_Value`

5.11.2 Auto Functions ROI Preset

The *Auto Functions ROI Preset* parameter lets the user select from a list of ROI presets.

Parameter	Auto Functions ROI Preset
`Full Sensor`	Select the full output image
`Center 50%`	Select a rectangular area in the center of the output image
`Center 25%`	Select a small rectangular area in the center of the output image
`Bottom Half`	Select the bottom half of the output image
`Top Half`	Select the top half of the output image
`Custom Rectangle`	Select a custom rectangle for fine-grained control
USB3 Vision: GenICam	`AutoFunctionsROIPreset`
Type	Enumeration
Video4Linux2	`Auto Functions ROI Preset`
VCD Property	`VCDID_AutoRoi\VCDElement_AutoRoiPreset`

5.11.3 Auto Functions ROI Custom Rectangle

When *Auto Functions ROI Preset* is set to *Custom Rectangle*, the user can manually set the position and size of the region of interest. The coordinates are relative to the origin of the current video format as specified by Partial Scan Offset.

Parameter	Auto Functions ROI Left
Minimum	0
Maximum	2576
Increment	2
USB3 Vision: GenICam	`AutoFunctionsROILeft`
Type	Integer
Video4Linux2	`Auto Functions ROI Left`
VCD Property	`VCDID_AutoRoi \VCDElement_AutoRoiLeftRelative`

Parameter	Auto Functions ROI Top
Minimum	0
Maximum	2032
Increment	2
USB3 Vision: GenICam	`AutoFunctionsROITop`
Type	Integer
Video4Linux2	`Auto Functions ROI Top`
VCD Property	`VCDID_AutoRoi \VCDElement_AutoRoiTopRelative`

Parameter	Auto Functions ROI Width
Minimum	16
Maximum	2592
Increment	2
USB3 Vision: GenICam	`AutoFunctionsROIWidth`
Type	Integer
Video4Linux2	`Auto Functions ROI Width`
VCD Property	`VCDID_AutoRoi \VCDElement_AutoRoiWidthRelative`

Parameter	Auto Functions ROI Height
Minimum	16
Maximum	2048
Increment	2
USB3 Vision: GenICam	`AutoFunctionsROIHeight`
Type	Integer
Video4Linux2	`Auto Functions ROI Height`
VCD Property	`VCDID_AutoRoi \VCDElement_AutoRoiHeightRelative`

5.12 User Sets

The 33U series cameras can store their complete configuration into built-in non-volatile memory. The camera configuration can be saved into and restored from one of two

available memory slots upon user's request. Additionally, the camera can be configured to load one of the user's camera configurations at startup.

5.12.1 User Set Selector

The *User Set Selector* parameter selects the memory slot on which consecutive load and save commands are executed.

Parameter	User Set Selector
`UserSet1`	First of the two memory slots for user configurations
`UserSet2`	Second of the two memory slots for user configurations
`Default`	A special memory slot that always contains the camera's factory default configuration. It cannot be overwritten
USB3 Vision: GenICam	`UserSetSelector`
Type	Enumeration

5.12.2 Load User Set

By using the *Load User Set* command, the user can restore the camera configuration from the memory slot selected by *User Set Selector*.

Parameter	Load User Set
Execute	Restore the camera configuration from the memory slot specified by *User Set Selector*
USB3 Vision: GenICam	`UserSetLoad`
Type	Command

5.12.3 Save User Set

By using the *Save User Set* command, the user can save the camera configuration into the memory slot selected by *User Set Selector*.

Parameter	Save User Set
Execute	Save the current camera configuration into the memory slot specified by *User Set Selector*
USB3 Vision: GenICam	`UserSetSave`
Type	Command

5.12.4 Default User Set

The *Default User Set* parameter controls the camera's startup behavior. It selects which memory slot is used for device initialization when the camera is powered up.

Parameter	Default User Set
`UserSet1`	Load configuration from the first memory slot
`UserSet2`	Load configuration from the second memory slot
`Default`	Load factory default configuration
USB3 Vision: GenICam	`UserSetDefault`
Type	Enumeration

5.13 Timestamp Control

33U series cameras run an internal timestamp clock. The clock starts at zero when the camera is powered up.

The source of the timestamp clock has a frequency tolerance of ±50 ppm.

All image buffers sent by the camera have a timestamp attached to them.

Notification for asynchronous Events also contain a timestamp value.

5.13.1 Timestamp Latch

The *Timestamp Latch* command copies the current value of the camera's timestamp counter into the Timestamp Latch Value so that it can be read later.

Parameter	Timestamp Latch
Execute	Copies the current value of the camera's timestamp into Timestamp Latch Value.
USB3 Vision: GenICam	`TimestampLatch`
Type	Command

5.13.2 Timestamp Latch Value

The *Timestamp Latch Value* feature contains the value of camera's timestamp counter at the time of the previous execution of the Timestamp Latch command.

Parameter	Timestamp Latch Value
USB3 Vision: GenICam	`TimestampLatchValue`
Type	Integer
Unit	µs

5.13.3 Timestamp Reset

The *Timestamp Reset* command resets the camera's timestamp counter to start from zero.

Parameter	Timestamp Reset
Execute	Resets the camera's timestamp counter.
USB3 Vision: GenICam	`TimestampReset`
Type	Command

5.14 Events

33U series devices can send asynchronous event packets, notifying the application about certain events during device operation.

To enable a specific event, select the event to enable in Event Selector and then set Event Notification to *On*.

The way to receive the event notifications depends on the used camera SDK. In most cases, a notification handler has to be registered on the feature named after the event, e.g. *EventTest* or *EventExposureEnd*. Additional event data can often be queried via additional features with a derived name, e.g. *EventTestTimestamp* or *EventExposureEndFrameID*.

5.14.1 Event Selector

The *Event Selector* parameter selects an event to configure.

Parameter	Event Selector
`ExposureEnd`	Selects the ExposureEnd event
`FrameTriggerMissed`	Selects the FrameTriggerMissed event
`Line1FallingEdge`	Selects the Line1FallingEdge event
`Line1RisingEdge`	Selects the Line1RisingEdge event
`Test`	Selects the Test event
USB3 Vision: GenICam	`EventSelector`
Type	Enumeration

5.14.2 Event Notification

The *Event Notification* parameter enables or disables the event selected by Event Selector.

Parameter	Event Notification
`On`	Enables notifications for the selected event
`Off`	Disables notifications for the selected event
USB3 Vision: GenICam	`EventNotification`
Type	Enumeration

5.14.3 Event Exposure End

The *Event Exposure End* feature is notified when the camera completes the exposure of an image.

It can be useful to synchronize camera exposure with real-world events, e.g. moving parts in front of the camera.

The value of this feature has no meaning and should not be read.

Parameter	Event Exposure End
USB3 Vision: GenICam	`EventExposureEnd`
Type	Integer

The *Event Exposure End Timestamp* parameter identifies the point in time when the current exposure end event occurred.

Please refer to the documentation of your camera SDK on how to safely read the timestamp associated with the current event when a notification is received.

Parameter	Event Exposure End Timestamp
USB3 Vision: GenICam	`EventExposureEndTimestamp`
Type	Integer

The *Event Exposure End Frame ID* parameter the frame number of the frame whose exposure was completed.

Please refer to the documentation of your camera SDK on how to safely read the timestamp associated with the current event when a notification is received.

Parameter	Event Exposure End Frame ID
USB3 Vision: GenICam	`EventExposureEndFrameID`
Type	Integer

5.14.4 Event Frame Trigger Missed

The *Event Frame Trigger Missed* feature is notified when the camera receives a trigger pulse, but the sensor was not in a state where a new exposure could be started.

The value of this feature has no meaning and should not be read.

Parameter	Event Frame Trigger Missed
USB3 Vision: GenICam	`EventFrameTriggerMissed`
Type	Integer

The *Event Frame Trigger Missed Timestamp* parameter identifies the point in time when the current frame trigger missed event occurred.

Please refer to the documentation of your camera SDK on how to safely read the timestamp associated with the current event when a notification is received.

Parameter	Event Frame Trigger Missed Timestamp
USB3 Vision: GenICam	`EventFrameTriggerMissedTimestamp`
Type	Integer

5.14.5 Event Line1 Falling Edge

The *Event Line1 Falling Edge* feature is notified when the input on Line1 changes from high to low.

The value of this feature has no meaning and should not be read.

Parameter	Event Line1 Falling Edge
USB3 Vision: GenICam	`EventLine1FallingEdge`
Type	Integer

The *Event Line1 Falling Edge Timestamp* parameter identifies the point in time when the current line1 falling edge event occurred.

Please refer to the documentation of your camera SDK on how to safely read the timestamp associated with the current event when a notification is received.

Parameter	Event Line1 Falling Edge Timestamp
USB3 Vision: GenICam	`EventLine1FallingEdgeTimestamp`
Type	Integer

5.14.6 Event Line1 Rising Edge

The *Event Line1 Rising Edge* feature is notified when the input on Line1 changes from high to low.

The value of this feature has no meaning and should not be read.

Parameter	Event Line1 Rising Edge
USB3 Vision: GenICam	`EventLine1RisingEdge`
Type	Integer

The *Event Line1 Rising Edge Timestamp* parameter identifies the point in time when the current line1 rising edge event occurred.

Please refer to the documentation of your camera SDK on how to safely read the timestamp associated with the current event when a notification is received.

Parameter	Event Line1 Rising Edge Timestamp
USB3 Vision: GenICam	`EventLine1RisingEdgeTimestamp`
Type	Integer

5.14.7 Event Test

The *Event Test* feature is notified when a test event occurs.

To generate a test event, use the *Test Event Generate* command.

The value of this feature has no meaning and should not be read.

Parameter	Event Test
USB3 Vision: GenICam	`EventTest`
Type	Integer

The *Event Test Timestamp* parameter identifies the point in time when the current test event occurred.

Please refer to the documentation of your camera SDK on how to safely read the timestamp associated with the current event when a notification is received.

Parameter	Event Test Timestamp
USB3 Vision: GenICam	`EventTestTimestamp`
Type	Integer

The *Test Event Generate* command can be used to generate a test event.

Parameter	Test Event Generate
Execute	Generate one test event
USB3 Vision: GenICam	`TestEventGenerate`
Type	Command

5.15 Bandwidth Control

When using multiple 33U series devices connected to the same host controller, the data rate has to be considered to allow consistent operation.

To limit the bandwith of a camera, set Device Link Throughput Limit Mode to `On`, and set Device Link Throughput Limit to the desired maximum data rate.

5.15.1 Device Link Throughput Limit Mode

The *Device Link Throughput Limit Mode* parameter enables or disables the effect of Device Link Throughput Limit.

If set, the camera's internal frame rate is automatically reduced to fit into the available bandwith.

Parameter	Device Link Throughput Limit Mode
`Off`	The bandwith the device uses for streaming is unlimited.
`On`	The maximum bandwidth the device uses for streaming is defined by Device Link Throughput Limit.
USB3 Vision: GenICam	`DeviceLinkThroughputLimitMode`
Type	Enumeration

5.15.2 Device Link Throughput Limit

The *Device Link Throughput Limit* parameter defines the maximum bandwidth used by the device to stream data.

Device Link Throughput Limit Mode must be set to `On` for *Device Link Throughput Limit* to have an effect.

Parameter	Device Link Throughput Limit
Minimum	1000000 Mbps
Maximum	400000000 Mbps
USB3 Vision: GenICam	`DeviceLinkThroughputLimit`
Type	Integer

6 Revision History

Date	Version	Description
2018/04/19		Initial release of this document
2023/07/19		Updated environmental section in quick facts chapter.
2024/01/09	Firmware 1554	Add EventExposureEnd, EventFrameTriggerMissed, EventLine1RisingEdge, EventLine1FallingEdge features
2024/11/13	Firmware 1732	Add DeviceLinkThroughputLimit feature

DFK 33UX249 Technical Reference Manual

All product and company names in this document may be trademarks and tradenames of their respective owners and are hereby acknowledged.

The Imaging Source Europe GmbH cannot and does not take any responsibility or liability for any information contained in this document. The source code presented in this document is exclusively used for didactic purposes. The Imaging Source does not assume any kind of warranty expressed or implied, resulting from the use of the content of this document or the source code.

The Imaging Source Company reserves the right to make changes in specifications, function or design at any time and without prior notice.

Last update: April 2025
© 2025 The Imaging Source
All rights reserved. Reprint, also in parts, only allowed with permission of The Imaging Source Europe GmbH.

All weights and dimensions are approximate. Unless otherwise specified, the lenses shown in the context of cameras are not shipped with these cameras.

Headquarters:

The Imaging Source Europe GmbH
Überseetor 18, D-28217 Bremen, Germany
Phone: +49 421 33591-0

North & South America:

The Imaging Source, LLC
4600 Park Road, Suite 470, Charlotte, NC 28209, United States
Phone: +1 877-462-4772

Asia Pacific:

The Imaging Source Asia Co., Ltd.
3F., No. 43-7/8, Zhongxing Road
Xizhi District, New Taipei City 221012, Taiwan
Phone: +886 2-2792-3153

www.theimagingsource.com