Technical Details

DFK 37BUX06A
Technical Reference Manual

THE IMAGINGSOURCE
TECHNOLOGY BASED ON STANDARDS

Table of Contents

1. Quick Facts 4

2. Dimensional Diagrams 6

2.1 DFK 37BUX06A C-Mount with Tripod Adapter ... 6

2.2 DFK 37BUX06A C-Mount without Tripod Adapter ... 7

3. I/O Connector 8

3.1 4-pin I/O Connector ... 8

3.1.1 TRIGGER_IN ... 8

3.1.2 STROBE_OUT ... 8

4. Spectral Characteristics 10

4.1 IR-Cut Filter ... 10

4.2 Spectral Sensitivity - IMX06A ... 10

5. Camera Controls 11

5.1 Sensor Readout Control ... 11

5.1.1 Pixel Format ... 11

5.1.1.1 8-Bit Bayer Raw ... 11

5.1.1.2 10-Bit Packed Bayer Raw ... 12

5.1.2 Resolution ... 12

5.1.3 Readout Modes ... 13

5.1.4 Frame Rate ... 14

5.1.5 Partial Scan Offset ... 15

5.1.6 Image Flipping ... 16

5.2 Image Sensor Control ... 16

5.2.1 Exposure Time ... 16

5.2.2 Gain ... 17

5.2.3 Black Level ... 17

5.3 Automatic Exposure and Gain Control ... 18

5.3.1 Auto Exposure ... 18

5.3.2 Auto Gain ... 18

5.3.3 Auto Reference Value ... 19

5.3.4 Highlight Reduction ... 19

5.3.5 Auto Exposure Limits ... 19

5.3.6 Auto Gain Limits ... 20

5.4 Trigger ... 21

5.4.1 Trigger Mode ... 21

5.4.2 Trigger Polarity ... 22

5.4.3 Software Trigger ... 22

5.4.4 Trigger Overlap ... 22

5.4.5 Trigger Delay ... 23

5.5 Digital I/O ... 23

5.5.1 General Purpose Input 23
5.5.2 General Purpose Output 24
5.6 Strobe 24
5.6.1 Strobe Enable 24
5.6.2 Strobe Polarity 25
5.6.3 Strobe Operation 25
5.7 White Balance 26
5.7.1 Auto White Balance 26
5.7.2 White Balance Mode 26
5.7.3 Manual White Balance 27
5.8 Region of Interest for Auto Functions 29
5.8.1 Auto Functions ROI Enable 30
5.8.2 Auto Functions ROI Preset 30
5.9 User Sets 30
5.9.1 User Set Selector 30
5.9.2 Load User Set 31
5.9.3 Save User Set 31
5.9.4 Default User Set 31
5.10 Timestamp Control 32
5.10.1 Timestamp Latch 32
5.10.2 Timestamp Latch Value 32
5.10.3 Timestamp Reset 32
5.11 Bandwidth Control 33
5.11.1 Device Link Throughput Limit Mode 33
5.11.2 Device Link Throughput Limit 33

6. Revision History 34

1 Quick Facts

General	
Vision Standard	USB3 Vision
Dynamic Range	10 bit
Resolution	8192x6144
Frame Rate at Full Resolution	7.5
Pixel Formats	8-Bit Bayer (RG) 10-Bit Bayer Packed (RG)

Optical Interface	
IR-Cut filter	Yes
Sensor Type	Sony IMX06A
Shutter Type	Rolling
Sensor Format	1/0.98 inch
Pixel Size	1.6 µm
Lens Mount	C

Electrical Interface	
Interface	USB 3.1gen1
Supply Voltage	4.75 VDC to 5.25 VDC
Current Consumption (DC)	approx 400 mA @ 5 VDC
I/O Connector	4-pin connector for trigger and strobe or general purpose input/output

Mechanical Data	
Dimensions	H: 42 mm, W: 42 mm, L: 25 mm
Mass	76 g

Adjustments	
Shutter	200 µs to 1 s
Gain	0 dB to 36.12 dB

Environmental Conditions	
Housing Temperature (operating)	-5 °C to 50 °C
Temperature (storage)	-20 °C to 80 °C
Humidity (operating)	20 % to 80 % (non-condensing)
Humidity (storage)	20 % to 95 % (non-condensing)

2 Dimensional Diagrams

2.1 DFK 37BUX06A C-Mount with Tripod Adapter

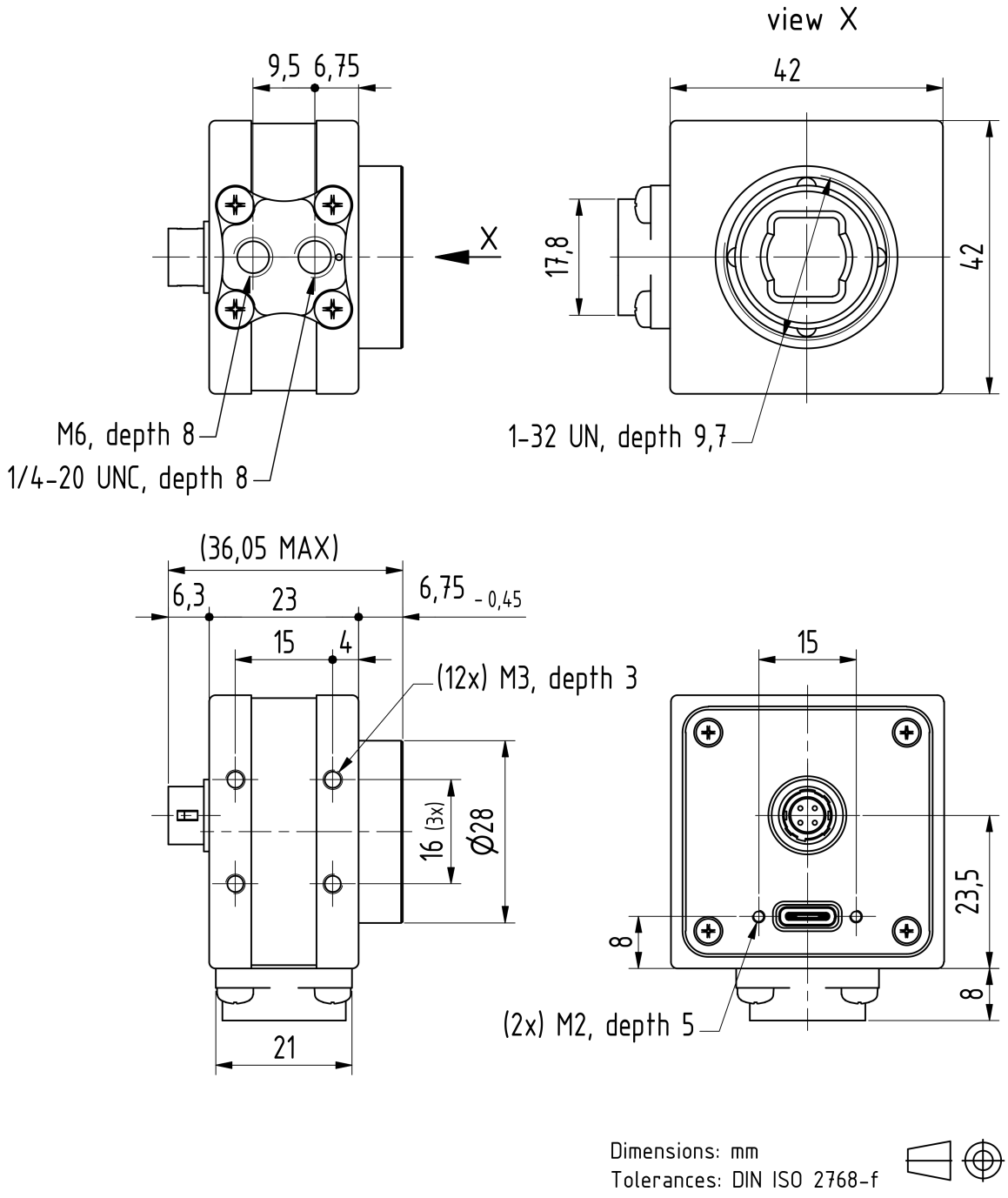

2.2 DFK 37BUX06A C-Mount without Tripod Adapter

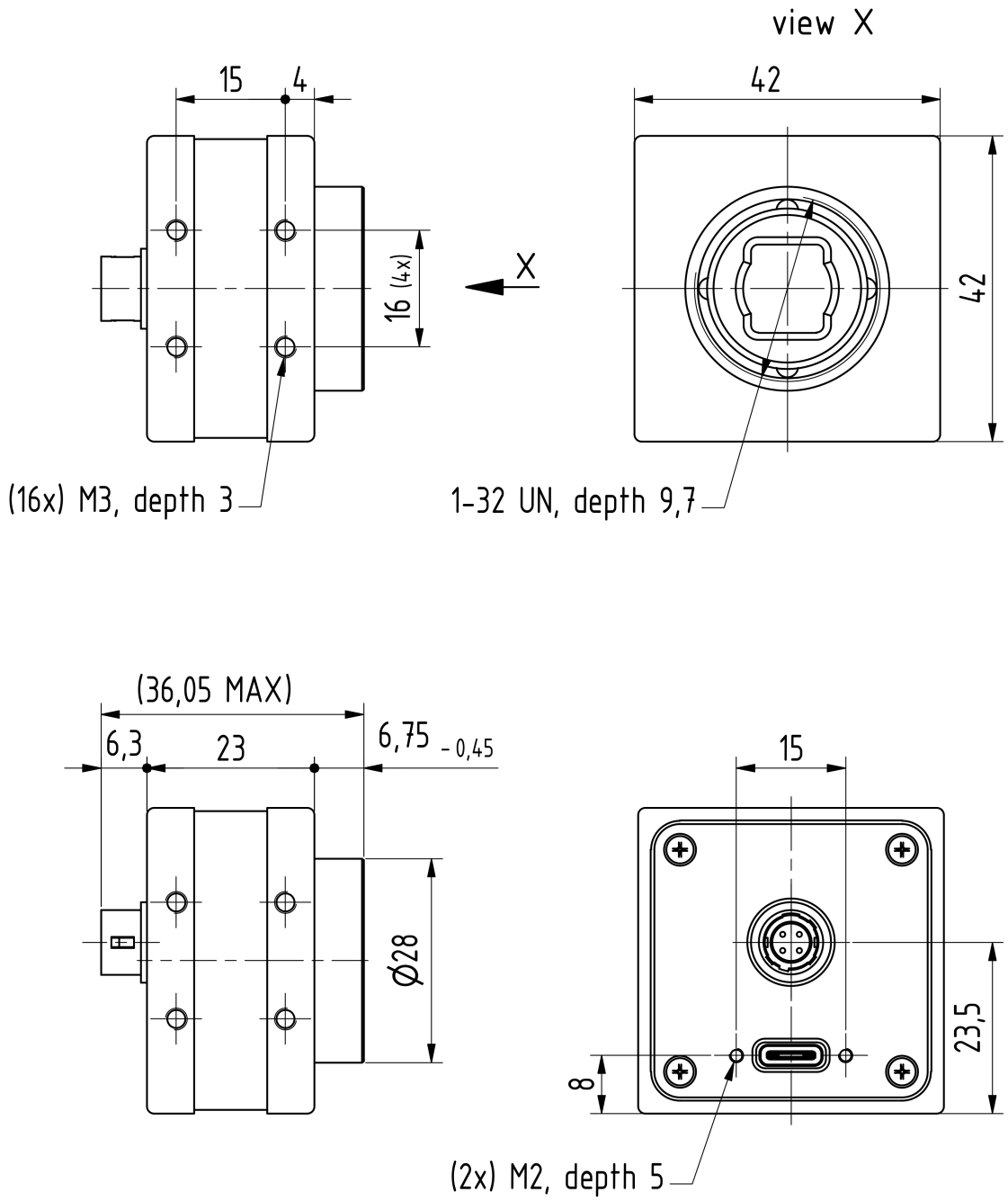

Dimensions: mm
Tolerances: DIN ISO 2768-f

3 I/O Connector

3.1 4-pin I/O Connector

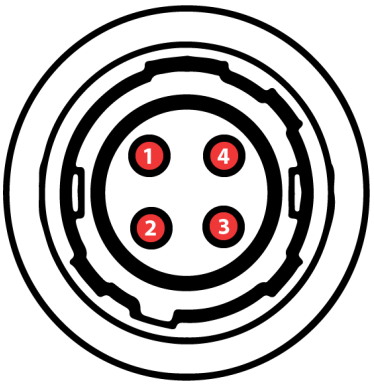

Rear view of camera

Pin	Signal	I/O	Remarks	Characteristics			
				Min	Typ	Max	Unit
1	GND_I/O	G[3]	External Ground	-	-	-	-
2	STROBE_OUT	O[3]	Open drain	-	-	24.0[1]	V
3	TRIGGER_IN (-)	I[3]	Optocoupler ground	-	-	-	-
4	TRIGGER_IN (+)	I[3]	Optocoupler signal	3.3[2]	-	24.0[2]	V

[1] max. 0.2A (ID) for open drain MOSFET!

[2] min. 3.5 mA driver strength required!

[3] G: Ground O: Output I: Input

The part number of this Hirose connector is HR10A-7R-4P. To create an I/O cable you need a Hirose connector HR10A-7P-4S.

3.1.1 TRIGGER_IN

The *TRIGGER_IN* line can be used to synchronize the start of the exposure time with external events. The Trigger section describes in detail how the image sensor's behavior can be controlled.

The current input signal can also be read directly through the General Purpose Input feature.

3.1.2 STROBE_OUT

The *STROBE_OUT* line's main usage is to indicate the integration time of the image sensor which allows flashes, strobes or other light sources to be synchronized with camera operation. The line's behavior can be controlled through the Strobe controls.

The output signal can also be directly controlled through the General Purpose Output feature.

4 Spectral Characteristics

4.1 IR-Cut Filter

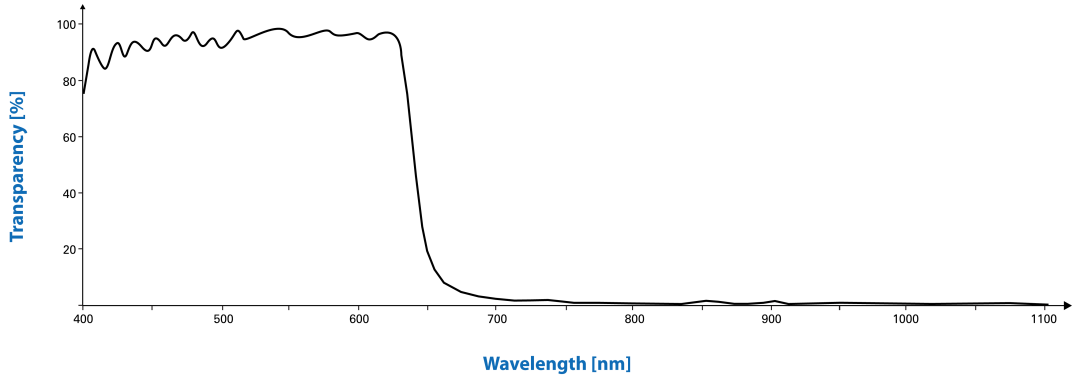

4.2 Spectral Sensitivity - IMX06A

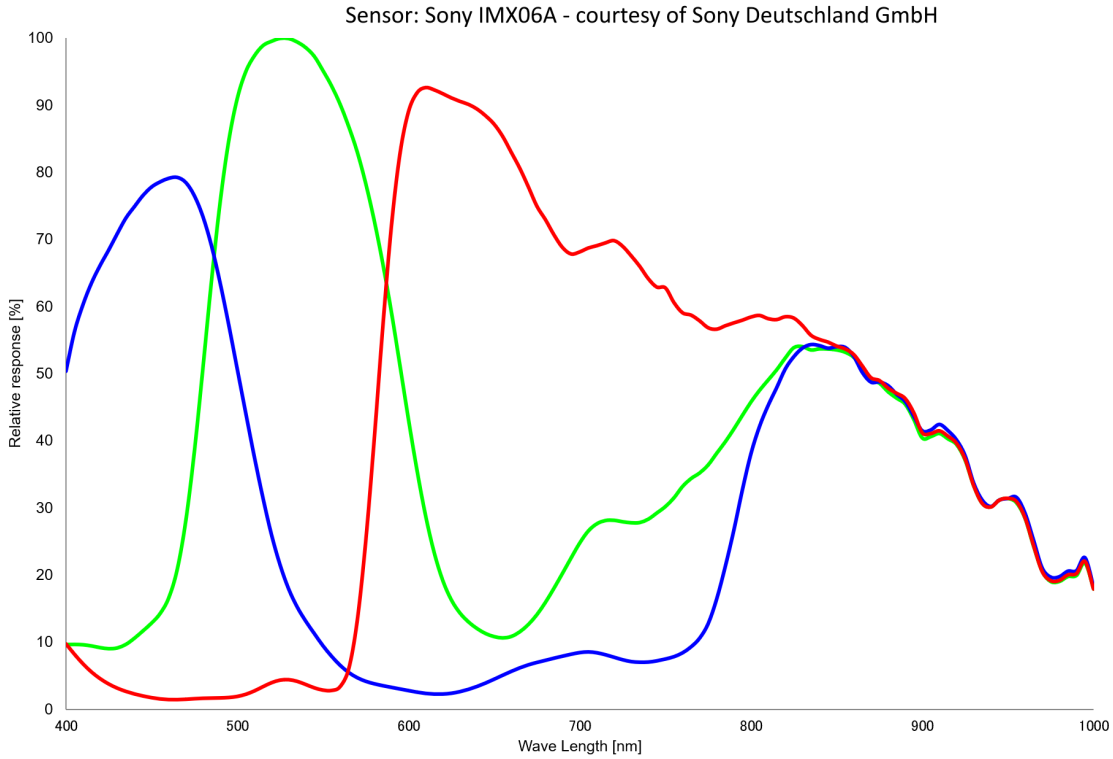

5 Camera Controls

This section describes the parameters available for the DFK 37BUX06A camera.

The actual name of the parameter depends on the driver technology used to access the camera. Parameter names are listed for the most common ways to access the cameras:

- *USB3 Vision* (*IC Imaging Control 4*, or via 3rd party driver)
- UVC/V4L2 (on Linux, via uvcvideo)
- *IC Imaging Control 3.x* (on Windows, via *Device Driver for The Imaging Source USB 33U, 37U and 38U Cameras*)

Please note: When the camera is connected to a USB2 controller and used in V4L2 mode or by *IC Imaging Control 3.x*, read requests can lead to frame drops. Avoid reading camera features to ensure a stable image transmission.

5.1 Sensor Readout Control

5.1.1 Pixel Format

The pixel format defines the data type of the pixels transmitted to the computer. The bits per pixel needed for a particular pixel format influence the required bandwith.

The driver technology used to access the camera significantly impacts the way the pixel format is controlled:

- When using *IC Imaging Control 4* or *USB3 Vision*, the pixel format is controlled through the `PixelFormat` *GenICam* feature.
- When using the uvcvideo driver on Linux, the pixel format is defined by video4linux2.
- When using *IC Imaging Control 3.x*, the pixel format is part of the video format - a parameter which combines pixel format, resolution and readout mode. For more information, refer to the *IC Imaging Control 3.x* documentation sections on `VideoFormat` and `VideoFormatDesc`.

The DFK 37BUX06A color camera supports multiple pixel formats with variable bits-per-pixel settings. The names of the pixel formats and the way to select them depends on the driver used to control the camera. The following table contains a short overview of all possible formats followed by a more detailed description.

Pixel Format	Bits Per Pixel	USB3 Vision	UVC	TIS UVC Driver
8-Bit Bayer (RG)	8	`BayerRG8`	`RGGB`	`RGB32`, `Y800`
10-Bit Packed Bayer (RG)	10	`BayerRG10p`	`RGAp`	`RGB64`, `Y16`

5.1.1.1 8-Bit Bayer Raw

This format transmits data using one byte for each pixel.

USB3 Vision drivers see this pixel format as one of the 8-bit bayer raw formats (`BayerGR8`, `BayerRG8`, `BayerGB8`, `BayerBG8`).

UVC drivers see it with the *FourCC* `GRBG`, `RGGB`, `GBRG` or `BA81`.

The *Device Driver for The Imaging Source USB 33U, 37U and 38U Cameras* simplifies this variety of possible pixel formats and offers two video formats instead: `RGB32` and `Y800`. The `RGB32` format results from the driver's automatic debayering of the raw image data, while the `Y800` format contains the raw data which is reinterpreted as monochrome.

5.1.1.2 10-Bit Packed Bayer Raw

This format transmits data using 5 bytes for each group of 4 consecutive pixels.

USB3 Vision drivers see this pixel format as one of the 10-bit packed bayer raw formats (`BayerGR10p`, `BayerRG10p`, `BayerGB10p`, `BayerBG10p`).

UVC drivers see it with the *FourCC* `GRAp`, `RGAp`, `GBAp` or `BGAp`.

The *Device Driver for The Imaging Source USB 33U, 37U and 38U Cameras* simplifies this variety of possible pixel formats and offers two video formats instead: `RGB64` and `Y16`. The `RGB64` format results from the driver's automatic debayering of the raw image data, while the `Y16` format contains the raw data which is reinterpreted as monochrome. Since the DFK 37BUX06A camera offers both 10-bit packed and 16-bit bayer raw pixel formats, the driver uses the 10-bit packed format when the `RGB64` or `Y16` video format is selected.

5.1.2 Resolution

The DFK 37BUX06A allows the user to specify which rectangular region of the image sensor to read out during camera operation. The size of this rectangle determines the number of pixels that have to be transferred for each frame and has a significant influence on the required USB bandwidth.

Lowering the resolution also often allows the image sensor to operate at a higher frame rate. Changes in the vertical resolution have more effect on the maximum frame rate than changes in the horizontal direction.

The way the resolution is controlled varies greatly between the driver technology used to access the camera:

- When using *USB3 Vision*, the resolution is controlled through the GenICam features Width and Height.
- When using the uvcvideo on Linux, the resolution is selected from a list of fixed formats. Dynamic frame sizes are not available.
- When using *IC Imaging Control*, the resolution is part of the video format, a parameter that combines pixel format, resolution and readout mode. For more information, refer to the *IC Imaging Control* documentation sections on `VideoFormat` and `VideoFormatDesc`.

Parameter	Horizontal Resolution
Minimum	1280
Maximum	8192
Increment	32
USB3 Vision: GenICam	`Width`
Type	Integer

Parameter	Vertical Resolution
Minimum	960
Maximum	6144
Increment	32
USB3 Vision: GenICam	`Height`
Type	Integer

5.1.3 Readout Modes

The DFK 37BUX06A camera offers different sensor readout modes.

By default, the camera outputs all pixels of the image sensor.

In *binning* modes, a number of neighboring pixels is merged into one output pixel during readout. The nature of this merge operation is sensor-specific, most sensors either add the pixel values or average them.

The way the readout modes are controlled depends greatly upon which driver technology is used to access the camera:

- When using *USB3 Vision*, the readout mode is controlled through the *GenICam* features `DecimationHorizontal`, `DecimationVertical`, `BinningHorizontal` and `BinningVertical`.
- When using *IC Imaging Control*, the readout mode is part of the video format - a parameter that which combines pixel format, resolution and readout mode. For more information, refer to the *IC Imaging Control* documentation sections on `VideoFormat` and `VideoFormatDesc`.

The following readout modes are supported:

- Default
- Binning 2X

Parameter	Binning Horizontal
Valid Values	1, 2
USB3 Vision: GenICam	`BinningHorizontal`
Type	Integer

Parameter	Binning Vertical
Valid Values	1, 2
USB3 Vision: GenICam	`BinningVertical`
Type	Integer

5.1.4 Frame Rate

The frame rate is specified in frames per second and determines the camera's operating speed.

The way the frame rate is controlled depends greatly upon which driver technology is used to access the camera:

- When using *USB3 Vision*, the frame rate is controlled through the *GenICam* feature `AcquisitionFrameRate`.
- When using uvcvideo on Linux, the frame rate is selected from a list of available frame rates.
- When using IC Imaging Control, the frame rate is selected from a list of available frame rates through APIs such as `Grabber::setFPS` or `ICImagingControl.DeviceFrameRate`.

The range of available frame rates depends upon other camera settings such as well, pixel format, resolution and readout modes.

Parameter	Frame Rate
Minimum	Depending on Pixel Format, Resolution, and Readout Mode
Maximum	Depending on Pixel Format, Resolution, and Readout Mode
USB3 Vision: GenICam	`AcquisitionFrameRate`
Type	Float

Please note: Enabling Device Link Throughput Limit Mode can limit the frame rate below the configured value.

The following tables show the maximum frame rate for some combinations of pixel format and resolution.

8-Bit Bayer Raw

Width	Height	Maximum Frame Rate
8192	6144	7.5
4096	3072	16

10-Bit Packed Bayer Raw

Width	Height	Maximum Frame Rate
8192	6144	6
4096	3072	16

5.1.5 Partial Scan Offset

If the selected resolution is smaller than the sensor size, the part of the sensor that is actually read out can be specified by the *Partial Scan Offset X* and *Partial Scan Offset Y* parameters. By default, the camera automatically positions the offsets so that the center of the sensor is used.

Parameter	Partial Scan Offset X
Minimum	0
Maximum	6912
Increment	32
USB3 Vision: GenICam	`OffsetX`
Type	Integer
Video4Linux2	`ROI Offset X`
VCD Property	`VCDID_PartialScanOffset \VCDElement_PartialScanOffsetX`

Parameter	Partial Scan Offset Y
Minimum	0
Maximum	5184
Increment	32
USB3 Vision: GenICam	`OffsetY`
Type	Integer
Video4Linux2	`ROI Offset Y`
VCD Property	`VCDID_PartialScanOffset \VCDElement_PartialScanOffsetY`

If *Partial Scan Offset X* or *Partial Scan Offset Y* is configured to a value that would be invalid with the current setting of Resolution setting, the camera uses the maximum possible value.

Parameter	Partial Scan Auto Center
`On`	Automatically configure Partial Scan Offset X/Y so that the center area of the sensor is read out
`True`	
`Off`	Control Partial Scan Offset X/Y manually
`False`	
USB3 Vision: GenICam	`OffsetAutoCenter`
Type	Boolean
Video4Linux2	`ROI Auto Center`
VCD Property	`VCDID_PartialScanOffset \VCDElement_PartialScanAutoCenter`

5.1.6 Image Flipping

The DFK 37BUX06A camera allows for horizontal flipping of the image data. The *Flip Horizontal* parameter can be used to control this sensor feature.

Parameter	Flip Horizontal
`True`	Image data is flipped horizontally
`False`	Image data is not flipped horizontally
USB3 Vision: GenICam	`ReverseX`
Type	Boolean
Video4Linux2	`Flip Horizontal`
VCD Property	`VCDID_FlipHorizontal\VCDElement_Value`

5.2 Image Sensor Control

5.2.1 Exposure Time

The *Exposure Time* parameter defines the time the camera opens its (electronic) shutter when it is taking an image.

Parameter	Exposure Time
Minimum	200 µs
Maximum	1 s
Default	auto
USB3 Vision: GenICam	`ExposureTime`
Type	Float
Video4Linux2	`Exposure Time (us)`
VCD Property	`VCDID_Exposure\VCDElement_Value`

5.2.2 Gain

The *Gain* parameter defines the amplification that is applied to the image at sensor level.

Parameter	Gain
Minimum	0 dB
Maximum	36.12 dB
Default	auto
USB3 Vision: GenICam	`Gain`
Type	Float
Video4Linux2	`Gain (db/100)`
VCD Property	`VCDID_Gain\VCDElement_Value`

5.2.3 Black Level

The *Black Level* parameter defines the lowest possibly intensity value of the image sensor.

Parameter	Black Level
Minimum	0
Maximum	4095
Default	64
USB3 Vision: GenICam	`BlackLevel`
Type	Float
Video4Linux2	`Brightness`
VCD Property	`VCDID_Brightness\VCDElement_Value`

5.3 Automatic Exposure and Gain Control

The DFK 37BUX06A camera can automatically control gain and exposure time. These automatic functions are enabled by default.

In order to optimize image parameters, a region of interest can be specified for automatic functions. Specifying a region of interest enables fine-grained control over the image area for which the image parameters are optimized. A selection of pre-defined area presets is available, but the user can also specify the coordinates of a custom rectangle.

In certain situations, it is desirable to limit the range of the auto-controlled parameters. For example, one might want to avoid high gain settings in order to keep noise levels low. Other applications require limiting the maximum exposure time so that movements do not get blurred. Therefore, the ranges of the gain and exposure parameter can be limited.

If both auto exposure and auto gain are active, the camera tries to lower the gain value in order to reduce noise and improve the image quality.

5.3.1 Auto Exposure

Parameter	Auto Exposure
`Continuous`	Enable Auto Exposure
`True`	
`Off`	Disable Auto Exposure
`False`	
USB3 Vision: GenICam	`ExposureAuto`
Type	Enumeration
Video4Linux2	`Auto Shutter`
VCD Property	`VCDID_Exposure\VCDElement_Auto`

5.3.2 Auto Gain

Parameter	Auto Gain
`Continuous`	Enable Auto Gain
`True`	
`Off`	Disable Auto Gain
`False`	
USB3 Vision: GenICam	`GainAuto`
Type	Enumeration
Video4Linux2	`Auto Gain`
VCD Property	`VCDID_Gain\VCDElement_Auto`

5.3.3 Auto Reference Value

The *Auto Reference Value* parameter specifies the target brightness for both auto exposure and auto gain.

Parameter	Auto Reference Value
Minimum	0
Maximum	255
Default	128
USB3 Vision: GenICam	`ExposureAutoReference`
Type	Integer
Video4Linux2	`ExposureAutoReference`
VCD Property	`VCDID_Exposure\VCDElement_AutoReference`

5.3.4 Highlight Reduction

Enabling *Highlight Reduction* lets the auto exposure and auto gain functions reduce overexposed areas in the output image. This feature is particularly useful when using 10/12/16-bit output images and a tone mapping algorithm in post-processing when using higher bit depths as the dark areas still contain a lot of useful information.

Parameter	Highlight Reduction
`True`	Try to reduce overexposed areas
`False`	Ignore overexposed areas and focus on matching the image brightness to the selected Auto Reference Value.
USB3 Vision: GenICam	`ExposureAutoHighlightReduction`
Type	Boolean
Video4Linux2	`Highlight Reduction`
VCD Property	`VCDID_HighlightReduction\VCDElement_Value`

5.3.5 Auto Exposure Limits

The *Auto Exposure Lower Limit* parameter determines the minimum possible value that can be set by the auto exposure algorithm.

Parameter	Auto Exposure Lower Limit
Minimum	200 µs
Maximum	1 s
USB3 Vision: GenICam	`ExposureAutoLowerLimit`
Type	Float
Video4Linux2	`Exposure Auto Lower Limit`

The *Auto Exposure Upper Limit* parameter determines the maximum possible value that can be set by the auto exposure algorithm.

Parameter	Auto Exposure Upper Limit
Minimum	200 µs
Maximum	1 s
USB3 Vision: GenICam	`ExposureAutoUpperLimit`
Type	Float
Video4Linux2	`Exposure Auto Upper Limit`
VCD Property	`VCDID_Exposure\VCDElement_AutoMaxValue`

If the *Auto Exposure Upper Limit Auto* parameter is enabled, the value of *Auto Exposure Upper Limit* is automatically kept at the maximum possible value for the current frame rate.

Parameter	Auto Exposure Upper Limit Auto
`On`	Select *Auto Exposure Upper Limit* automatically
`Off`	Let the user control *Auto Exposure Upper Limit*
USB3 Vision: GenICam	`ExposureAutoUpperLimitAuto`
Type	Enumeration
Video4Linux2	`Exposure Auto Upper Limit Auto`
VCD Property	`VCDID_Exposure\VCDElement_AutoMaxValueAuto`

5.3.6 Auto Gain Limits

The *Auto Gain Lower Limit* parameter determines the minimum possible value that can be set by the auto gain algorithm.

Parameter	Auto Gain Lower Limit
Minimum	0 dB
Maximum	36.12 dB
USB3 Vision: GenICam	`GainAutoLowerLimit`
Type	Float
Video4Linux2	`Gain Auto Lower Limit`

The *Auto Gain Upper Limit* parameter determines the maximum possible value that can be set by the auto gain algorithm.

Parameter	Auto Gain Upper Limit
Minimum	0 dB
Maximum	36.12 dB
USB3 Vision: GenICam	`GainAutoUpperLimit`
Type	Float
Video4Linux2	`Gain Auto Upper Limit`

5.4 Trigger

The trigger mode can be used to take images at very specific points in time which are specified by an electrical signal connected to the TRIGGER_IN pin of the I/O connector of the camera.

5.4.1 Trigger Mode

The *Trigger Mode* parameter enables the trigger mode.

Parameter	Trigger Mode
`On`	Enable Trigger Mode
`True`	
`Off`	Disable Trigger Mode
`False`	
USB3 Vision: GenICam	`TriggerMode`
Type	Enumeration
Video4Linux2	`Trigger Mode`
VCD Property	`VCDID_Trigger\VCDElement_Value`

5.4.2 Trigger Polarity

The *Trigger Polarity* parameter controls whether a trigger event is accepted on the rising or falling edge of the signal connected to the TRIGGER_IN line.

Parameter	Trigger Polarity
`RisingEdge`	Accept rising edge as trigger signal
`True`	
`FallingEdge`	Accept falling edge as trigger signal
`False`	
USB3 Vision: GenICam	`TriggerActivation`
Type	Enumeration
Video4Linux2	`Trigger Polarity`
VCD Property	`VCDID_Trigger\VCDElement_Polarity`

5.4.3 Software Trigger

The *Software Trigger* function can be used to simulate a trigger pulse, in turn causing one image to be exposed and delivered to the host computer.

Parameter	Software Trigger
Execute	Simulate one trigger pulse
USB3 Vision: GenICam	`TriggerSoftware`
Type	Command
Video4Linux2	`Software Trigger`
VCD Property	`VCDID_Trigger\VCDElement_SoftwareTrigger`

5.4.4 Trigger Overlap

The *Trigger Overlap* feature gives information on when a new trigger pulse is accepted in the trigger -> exposure -> readout sequence.

Parameter	Trigger Overlap
`Off`	The next trigger pulse is only accepted once the previous frame has been read out from the sensor
`Readout`	The next trigger pulse is accepted during readout as long as the remaining readout time is shorter than the exposure time
USB3 Vision: GenICam	`TriggerOverlap`
Type	Enumeration
VCD Property	`VCDID_Trigger\VCDElement_TriggerOverlap`

5.4.5 Trigger Delay

The *Trigger Delay* parameter specifies a time for which the camera waits between receiving a trigger signal and starting the exposure of an image. Simulated trigger pulses generated through the *Software Trigger* function are not delayed by this parameter.

Parameter	Trigger Delay
Minimum	0 s
Maximum	0.1 s
USB3 Vision: GenICam	`TriggerDelay`
Type	Float
Video4Linux2	`Trigger Delay`
VCD Property	`VCDID_Trigger\VCDElement_TriggerDelay`

5.5 Digital I/O

37U series cameras have one digital input and one digital output. The digital input can be used as a Trigger input but the current status can also examined directly.

The digital output can be configured as a Strobe output to signal the exact moment when the image sensor is sensitive to light so that external light sources can be synchronized to its operation cycle.

5.5.1 General Purpose Input

The *General Purpose Input* parameter allows the current status of the TRIGGER_IN pin.

Parameter	General Purpose Input
`True`	TRIGGER_IN line status is low
`1`	
`False`	TRIGGER_IN line status is high
`0`	
USB3 Vision: GenICam	`GPIn`
Type	Boolean
Video4Linux2	`GPIN`
VCD Property	`VCDID_GPIO\VCDElement_GPIORead` `VCDID_GPIO\VCDElement_GPIOIn`

5.5.2 General Purpose Output

The *General Purpose Output* parameter controls the status of the STROBE_OUT pin.

Parameter	General Purpose Output
`True`	Drive the STROBE_OUT line high
`1`	
`False`	Drive the STROBE_OUT line low
`0`	
USB3 Vision: GenICam	`GPOut`
Type	Boolean
Video4Linux2	`GPOUT`
VCD Property	`VCDID_GPIO\VCDElement_GPIOWrite` `VCDID_GPIO\VCDElement_GPIOOut`

5.6 Strobe

The strobe function controls the automatic generation of output pulses on the STROBE_OUT pin which is synchronized to the image sensor's exposure time.

5.6.1 Strobe Enable

The *Strobe Enable* parameter enables the automatic generation of strobe pulses.

Parameter	Strobe Enable
`On`	Strobe enabled
`True`	
`Off`	Strobe disabled
`False`	
USB3 Vision: GenICam	`StrobeEnable`
Type	Enumeration
Video4Linux2	`Strobe Enable`
VCD Property	`VCDID_Strobe\VCDElement_Value`

5.6.2 Strobe Polarity

The *Strobe Polarity* parameter can be used to invert the strobe pulse output.

Parameter	Strobe Polarity
`ActiveHigh`	The STROBE_OUT pin is logically high during the exposure time
`True`	
`ActiveLow`	The STROBE_OUT pin is logically low during the exposure time
`False`	
USB3 Vision: GenICam	`StrobePolarity`
Type	Enumeration
Video4Linux2	`Strobe Polarity`
VCD Property	`VCDID_Strobe\VCDElement_StrobePolarity`

5.6.3 Strobe Operation

The *Strobe Operation* parameter specifies how the length of the strobe pulses are controlled.

Parameter	Strobe Operation
`Exposure`	Output pulse duration is equal to the current exposure time
`True`	
USB3 Vision: GenICam	`StrobeOperation`
Type	Enumeration
Video4Linux2	`Strobe Exposure`
VCD Property	`VCDID_Strobe\VCDElement_StrobeMode`

5.7 White Balance

The DFK 37BUX06A color camera can perform white balance by digital multiplication of the appropriate raw pixel values.

5.7.1 Auto White Balance

DFK 37BUX06A can perform *Auto White Balance*. It can be enabled continuously when changes in lighting conditions are expected. Under controlled lighting conditions, however, one-time white balance calibration is the recommended approach.

To perform one-time white balance calibration, place a reference white sheet in front of the camera and set `BalanceWhiteAuto` to *Once*. The camera will then find the correct white balance settings for the current light conditions and keep them active until instructed otherwise.

Parameter	Auto White Balance
`Continuous`	Enable automatic white balance
`True`	
`Once`	Enable automatic white balance until the color channels have been balanced once
`One Push`	
`Off`	Disable automatic white balance
`False`	
USB3 Vision: GenICam	`BalanceWhiteAuto`
Type	Enumeration
Video4Linux2	`White Balance Component, Auto`
VCD Property	`VCDID_WhiteBalance\VCDElement_Auto` `VCDID_WhiteBalance\VCDElement_OnePush`

5.7.2 White Balance Mode

The default auto white balance algorithm is *Gray World*. It is selected by setting the *White Balance Mode* accordingly. The *Gray World* algorithm operates under the assumption that the average color of a scene is near gray and adjusts the white balance coefficients so the average color of the resulting image is gray as well. In the case where this assumption is wrong (e.g. the camera is pointing at a blue carpet), the auto white balance algorithm will select coefficients that do not result in a visually accurate image.

To avoid the problems posed by the *Gray World* algorithm, the *Temperature* mode can be used. This mode operates by trying to determine the color temperature of the light source.

Parameter	White Balance Mode
`Gray World`	Use the *Gray World* model
`Temperature`	Use the *Temperature* model
USB3 Vision: GenICam	`BalanceWhiteMode`
Type	Enumeration
Video4Linux2	`Whitebalance Mode`
VCD Property	`VCDID_WhiteBalance \VCDElement_WhiteBalanceMode`

To assist the automatic white balance temperature detection, *White Balance Auto Preset* can be used to limit the range of valid color temperatures.

Parameter	White Balance Auto Preset
`Any`	Allow any color temperature
`Auto Warm White`	Limit color temperature to approximately 2500-4000 K
`Auto Cool White`	Limit color temperature to approximately 4000-5800 K
`Auto Daylight`	Limit color temperature to approximately 5700-7500 K
`Auto Deep Shade`	Limit color temperature to approximately 7500-10000 K
USB3 Vision: GenICam	`BalanceWhiteAutoPreset`
Type	Enumeration
Video4Linux2	`Whitebalance Auto Preset`
VCD Property	`VCDID_WhiteBalance \VCDElement_WhiteBalanceAutoPreset`

5.7.3 Manual White Balance

If *Auto White Balance* is not enabled, the amplifiers for the red, green and blue channels can be controlled manually.

Parameter	White Balance Red
Minimum	0
Maximum	3.984375
Default	auto
USB3 Vision: GenICam	`BalanceRatio[BalanceRatioSelector=Red]`
Type	Float
Video4Linux2	`White Balance Red Component`
VCD Property	`VCDID_WhiteBalance \VCDElement_WhiteBalanceRed`

Parameter	White Balance Green
Minimum	0
Maximum	3.984375
Default	auto
USB3 Vision: GenICam	`BalanceRatio[BalanceRatioSelector=Green]`
Type	Float
Video4Linux2	`White Balance Green Component`
VCD Property	`VCDID_WhiteBalance \VCDElement_WhiteBalanceGreen`

Parameter	White Balance Blue
Minimum	0
Maximum	3.984375
Default	auto
USB3 Vision: GenICam	`BalanceRatio[BalanceRatioSelector=Blue]`
Video4Linux2	`White Balance Blue Component`
VCD Property	`VCDID_WhiteBalance \VCDElement_WhiteBalanceBlue`

If *White Balance Mode* is set to *Temperature*, the color temperature can be set directly. Additionally, a light source can be selected from a list of presets.

Parameter	White Balance Temperature
Minimum	2500 K
Maximum	10000 K
Default	auto
Increment	100
USB3 Vision: GenICam	`BalanceWhiteTemperature`
Type	Integer
Video4Linux2	`White Balance Temperature`
VCD Property	`VCDID_WhiteBalance \VCDElement_WhiteBalanceTemperature`

Parameter	White Balance Temperature Preset
`Sodium-Vapor Lamp`	2500 K
`Warm Light`	2700 K
`Halogen Light`	3000 K
`Neutral White`	3500 K
`Cool White Fluorescent Light`	4000 K
`Cool White/Daylight (CFL)`	5000 K
`Daylight`	6000 K
`Cool White LED`	7500 K
`Blue Sky`	10000 K
USB3 Vision: GenICam	`BalanceWhiteTemperaturePreset`
Type	Enumeration
Video4Linux2	`Whitebalance Temperature Preset`
VCD Property	`VCDID_WhiteBalance \VCDElement_TemperaturePreset`

5.8 Region of Interest for Auto Functions

37U series cameras allow for the setting of a region of interest that is used while controlling the Auto Exposure, Auto Gain and Auto White Balance functions.

5.8.1 Auto Functions ROI Enable

The *Auto Functions ROI Enable* parameter allows for the use of a region of interest for auto functions.

Parameter	Auto Functions ROI Enable
`True`	Auto functions only take a specified part of the image into account
`False`	Auto functions look at the whole image
USB3 Vision: GenICam	`AutoFunctionsROIEnable`
Type	Boolean
Video4Linux2	`Auto Functions ROI Enable`
VCD Property	`VCDID_AutoRoi\VCDElement_Value`

5.8.2 Auto Functions ROI Preset

The *Auto Functions ROI Preset* parameter lets the user select from a list of ROI presets.

Parameter	Auto Functions ROI Preset
`Center 50%`	Select a rectangular area in the center of the output image
USB3 Vision: GenICam	`AutoFunctionsROIPreset`
Type	Enumeration
Video4Linux2	`Auto Functions ROI Preset`
VCD Property	`VCDID_AutoRoi\VCDElement_AutoRoiPreset`

5.9 User Sets

37U series cameras can store their complete configuration into built-in non-volatile memory. The camera configuration can be saved into and restored from one of two available memory slots upon user's request. Additionally, the camera can be configured to load one of the user's camera configurations at startup.

5.9.1 User Set Selector

The *User Set Selector* parameter selects the memory slot on which consecutive load and save commands are executed.

Parameter	User Set Selector
`UserSet1`	First of the two memory slots for user configurations
`UserSet2`	Second of the two memory slots for user configurations
`Default`	A special memory slot that always contains the camera's factory default configuration. It cannot be overwritten
USB3 Vision: GenICam	`UserSetSelector`
Type	Enumeration

5.9.2 Load User Set

By using the *Load User Set* command, the user can restore the camera configuration from the memory slot selected by *User Set Selector*.

Parameter	Load User Set
Execute	Restore the camera configuration from the memory slot specified by *User Set Selector*
USB3 Vision: GenICam	`UserSetLoad`
Type	Command

5.9.3 Save User Set

By using the *Save User Set* command, the user can save the camera configuration into the memory slot selected by *User Set Selector*.

Parameter	Save User Set
Execute	Save the current camera configuration into the memory slot specified by *User Set Selector*
USB3 Vision: GenICam	`UserSetSave`
Type	Command

5.9.4 Default User Set

The *Default User Set* parameter controls the camera's startup behavior. It selects which memory slot is used for device initialization when the camera is powered up.

Parameter	Default User Set
`UserSet1`	Load configuration from the first memory slot
`UserSet2`	Load configuration from the second memory slot
`Default`	Load factory default configuration
USB3 Vision: GenICam	`UserSetDefault`
Type	Enumeration

5.10 Timestamp Control

37U series cameras run an internal timestamp clock. The clock starts at zero when the camera is powered up.

The source of the timestamp clock has a frequency tolerance of ±50 ppm.

All image buffers sent by the camera have a timestamp attached to them.

5.10.1 Timestamp Latch

The *Timestamp Latch* command copies the current value of the camera's timestamp counter into the Timestamp Latch Value so that it can be read later.

Parameter	Timestamp Latch
Execute	Copies the current value of the camera's timestamp into Timestamp Latch Value.
USB3 Vision: GenICam	`TimestampLatch`
Type	Command

5.10.2 Timestamp Latch Value

The *Timestamp Latch Value* feature contains the value of camera's timestamp counter at the time of the previous execution of the Timestamp Latch command.

Parameter	Timestamp Latch Value
USB3 Vision: GenICam	`TimestampLatchValue`
Type	Integer
Unit	µs

5.10.3 Timestamp Reset

The *Timestamp Reset* command resets the camera's timestamp counter to start from zero.

Parameter	Timestamp Reset
Execute	Resets the camera's timestamp counter.
USB3 Vision: GenICam	`TimestampReset`
Type	Command

5.11 Bandwidth Control

When using multiple 37U series devices connected to the same host controller, the data rate has to be considered to allow consistent operation.

To limit the bandwith of a camera, set Device Link Throughput Limit Mode to `On`, and set Device Link Throughput Limit to the desired maximum data rate.

5.11.1 Device Link Throughput Limit Mode

The *Device Link Throughput Limit Mode* parameter enables or disables the effect of Device Link Throughput Limit.

If set, the camera's internal frame rate is automatically reduced to fit into the available bandwith.

Parameter	Device Link Throughput Limit Mode
`Off`	The bandwith the device uses for streaming is unlimited.
`On`	The maximum bandwidth the device uses for streaming is defined by Device Link Throughput Limit.
USB3 Vision: GenICam	`DeviceLinkThroughputLimitMode`
Type	Enumeration

5.11.2 Device Link Throughput Limit

The *Device Link Throughput Limit* parameter defines the maximum bandwidth used by the device to stream data.

Device Link Throughput Limit Mode must be set to `On` for *Device Link Throughput Limit* to have an effect.

Parameter	Device Link Throughput Limit
Minimum	1000000 Bps
Maximum	400000000 Bps
USB3 Vision: GenICam	`DeviceLinkThroughputLimit`
Type	Integer

6 Revision History

Date	Version	Description
2026/07/10		Initial release of this document

DFK 37BUX06A Technical Reference Manual

All product and company names in this document may be trademarks and tradenames of their respective owners and are hereby acknowledged.

The Imaging Source Europe GmbH cannot and does not take any responsibility or liability for any information contained in this document. The source code presented in this document is exclusively used for didactic purposes. The Imaging Source does not assume any kind of warranty expressed or implied, resulting from the use of the content of this document or the source code.

The Imaging Source Company reserves the right to make changes in specifications, function or design at any time and without prior notice.

Last update: September 2026
© 2026 The Imaging Source
All rights reserved. Reprint, also in parts, only allowed with permission of The Imaging Source Europe GmbH.

All weights and dimensions are approximate. Unless otherwise specified, the lenses shown in the context of cameras are not shipped with these cameras.

Headquarters:

The Imaging Source Europe GmbH
Überseetor 18, D-28217 Bremen, Germany
Phone: +49 421 33591-0

North & South America:

The Imaging Source, LLC
4600 Park Road, Suite 470, Charlotte, NC 28209, United States
Phone: +1 877-462-4772

Asia Pacific:

The Imaging Source Asia Co., Ltd.
3F., No. 43-7/8, Zhongxing Road
Xizhi District, New Taipei City 221012, Taiwan
Phone: +886 2-2792-3153

www.theimagingsource.com