Technical Details

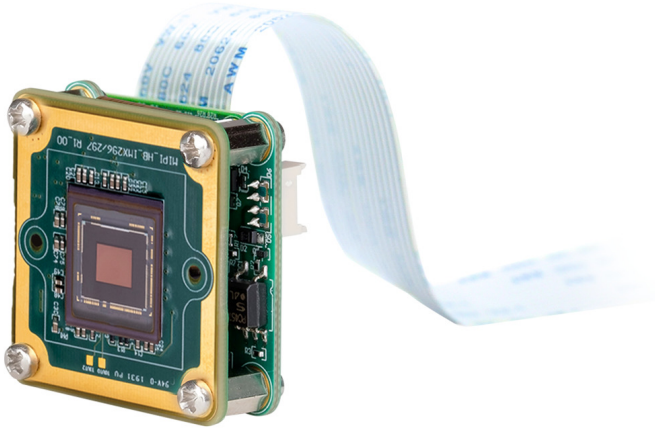

DFM 36AX568-ML
Technical Reference Manual

THE IMAGINGSOURCE
TECHNOLOGY BASED ON STANDARDS

Table of Contents

1. Quick Facts 3

2. Electrical Characteristics 5

2.1 Absolute Maximum Ratings 5

2.2 Recommended Operating Conditions 5

3. Dimensional Diagrams 6

3.1 DFM 36AX568-ML Board Camera 6

4. Spectral Characteristics 7

4.1 Spectral Sensitivity - IMX568-AAQJ-C 7

5. 15-Pin Camera Connector 8

6. I/O Connector 9

7. I2C I/O Expander Configuration 11

8. Sensor Clock Configuration 12

9. I2C Devices 13

10. Trigger Control FPGA 14

1 Quick Facts

General	
Dynamic Range	10 bit
Resolution	2448x2048
Frame Rate at Full Resolution	30
Pixel Formats	10-Bit Bayer (BG)

Optical Interface	
Sensor Type	Sony IMX568-AAQJ-C
Shutter Type	Global
Sensor Format	1/1.8 inch
Pixel Size	2.74 µm

Electrical Interface	
Interface	15-Pin Raspberry Pi Camera Connector
Supply voltage	3.3V
Current consumption	approx 360 mA @ 3.3 VDC

Mechanical Data	
Dimensions	H: 30 mm, W: 30 mm, L: 16.2 mm
Mass	12 g

Adjustments	
Shutter	1 µs to 1 s
Gain	0 dB to 48 dB

Environmental	
Temperature (operating)	-5 °C to 45 °C
Temperature (storage)	-20 °C to 60 °C
Humidity (operating)	20 % to 80 % (non-condensing)
Humidity (storage)	20 % to 95 % (non-condensing)

2 Electrical Characteristics

2.1 Absolute Maximum Ratings

Item	Symbol	Pins	Min	Max	Unit
Supply voltage	V_IN	+3V3	-0.3	+4.5	V
I2C voltage	V_I2C	I2C_SCL I2C_SDA	-0.3	+6.0	V

2.2 Recommended Operating Conditions

Item	Symbol	Pins	Min	Typ	Max	Unit
Supply voltage	V_IN	+3V3	3.0	3.3	3.6	V
I2C voltage	V_I2C	I2C_SCL I2C_SDA	3.0	3.3	3.6	V

3 Dimensional Diagrams

3.1 DFM 36AX568-ML Board Camera

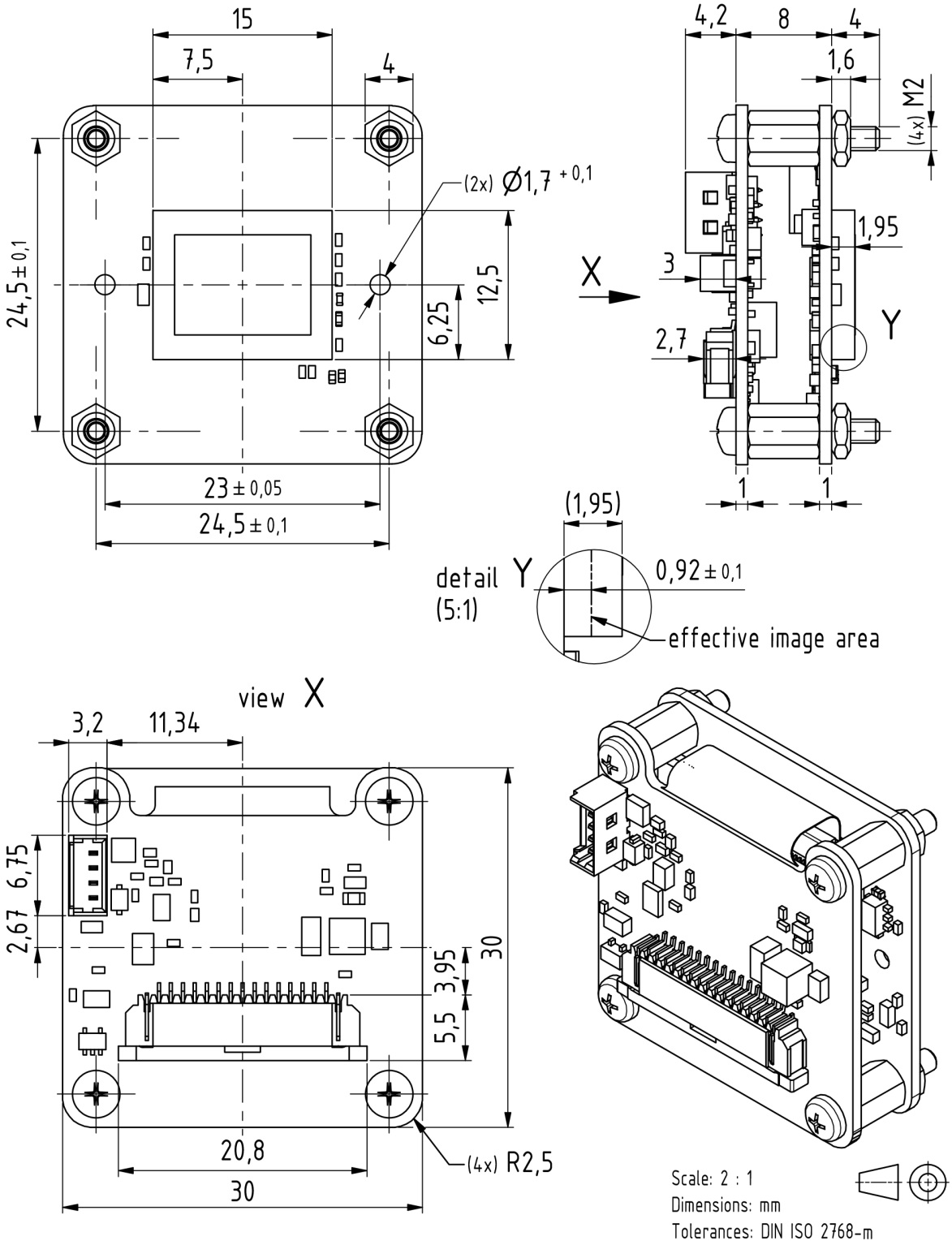

4 Spectral Characteristics

4.1 Spectral Sensitivity - IMX568-AAQJ-C

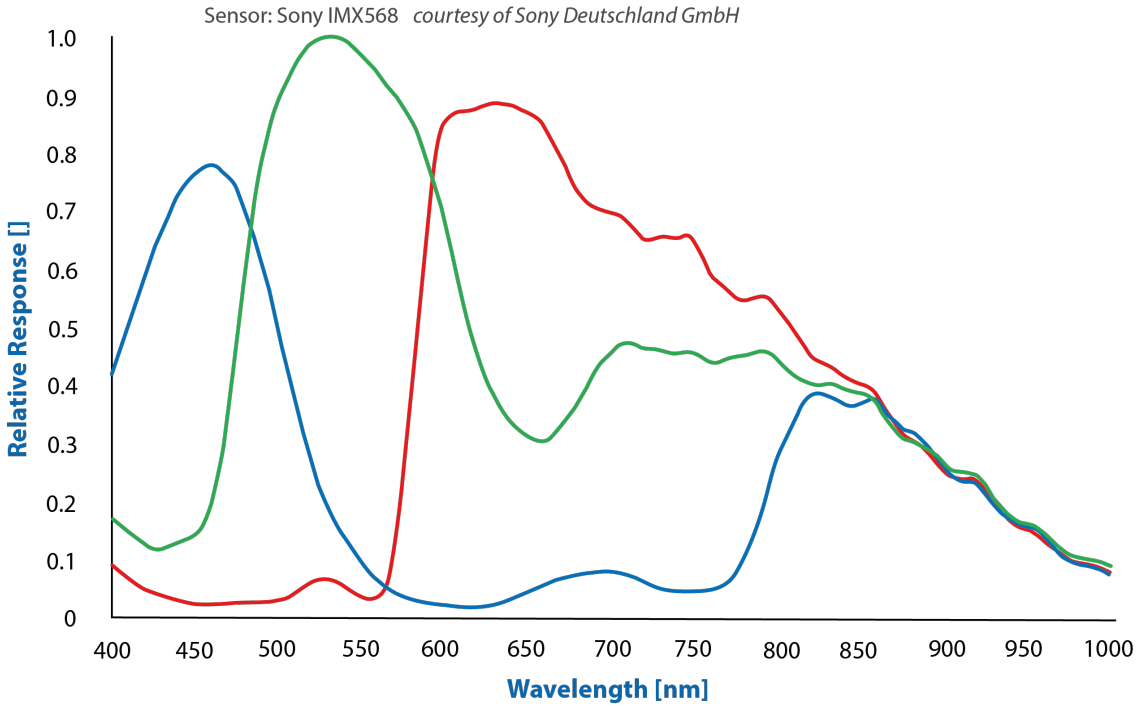

5 15-Pin Camera Connector

The connector J1 (SFW15R-1STE1LF) is compatible to the camera interface on NVIDIA Jetson Nano, Jetson Xavier NX and Raspberry Pi camera interface:

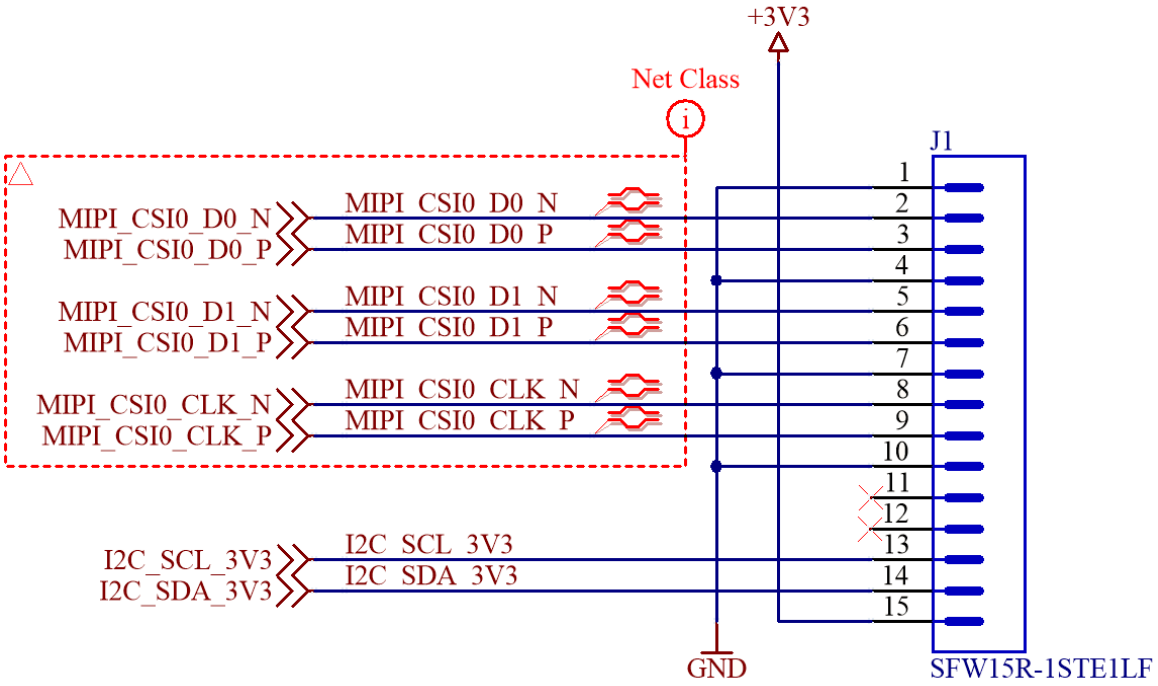

6 I/O Connector

The DFM 36AX568-ML camera has a user GPIO I/O connector with the following pinout:

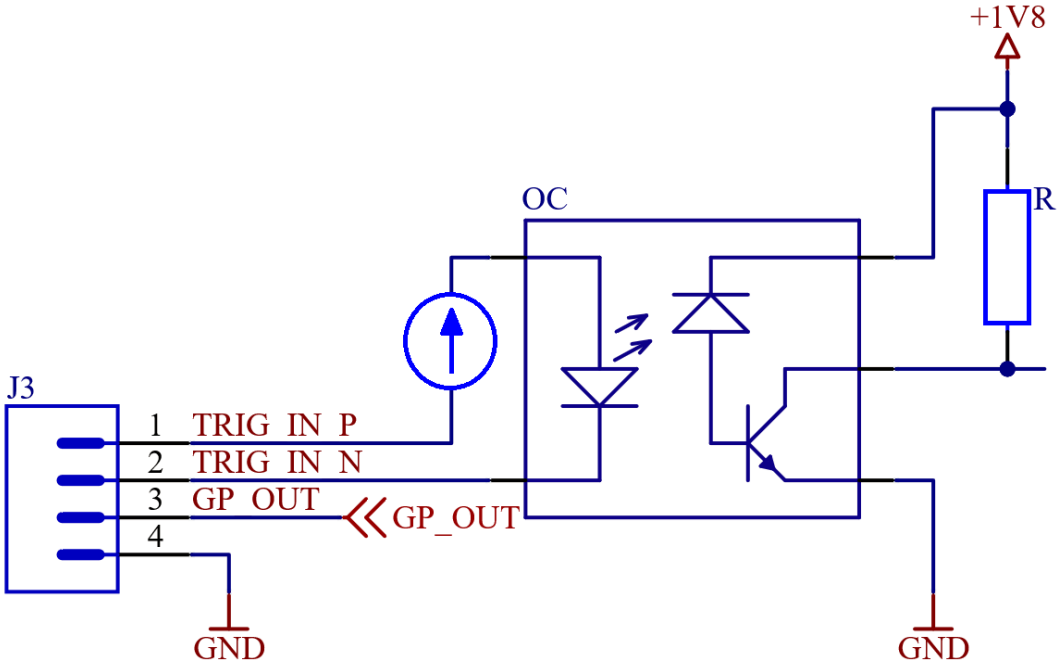

Pin	Name	Description
1	TRIGGER_IN_P	Opto-decoupled trigger input, anode of IR-LED
2	TRIGGER_IN_N	Opto-decoupled trigger input, cathode of IR-LED
3	GP_OUT	General purpose output, referenced to GND
4	GND	System ground

The trigger input is opto-decoupled. To drive the trigger input, a voltage must be applied to pins 1 and 2. Note: pin 1 is the positive input; pin 2 is the negative input.

Pin 3 is a general-purpose output pin that can be controlled via software. The pin can be configured for TTL mode output or open drain output. LED2 indicates a possible overcurrent.

The recommended operating conditions of the user GPIO connector J3 are displayed in the following tables. CAUTION: Functional operation beyond the recommended operating conditions is not assumed.

Parameter	Min	Max
Trigger input voltage	3.15V	25.5V

Parameter	Min	Max
TTL-mode high voltage	-	250mA @ 4V
TTL-mode low voltage	-	250mA @ 0.05V

Parameter	Min	Max
Open-drain-mode voltage	-	24V
Open-drain-mode current	-	250mA

Please ensure that enough additional power is provided via the embedded system to operate the connected devices at the user GPIO connector (J3).

7 I2C I/O Expander Configuration

Various I/O functionalities of the camera are controlled through a I2C I/O Expander.

The TCA6408A part has the 7-bit I2C-address 0x20. The table below depicts which signals can be controlled through this expander:

I/O Pin	Name	Dir	Description
P0	CAM_PWR	O	Enable CMOS sensor power supply 0: Sensor power disabled 1: Sensor power enabled
P1	RESET	O	CMOS sensor reset signal 0: Sensor is in reset state 1: Sensor is in operational state
P2	GPOUT_LEVEL	O	If GPOUT_SELECT = 0: --->0: LED1 off --->1: LED1 on If GPOUT_SELECT = 1: --->0: GPOUT is low/0 V --->1: GPOUT is tri-stated or high/+5V (depends on the setting of P3)
P3	GPOUT_PUSHPULL	O	GPOUT (PicoBlade) type selection 0: GPOUT is configured as open-drain-output 1: GPOUT is configured as TTL/push-pull-output
P4	GPOUT_SELECT	O	Function of GPOUT (PicoBlade) Pin 0: STROBE from CMOS sensor board 1: GPOUT_LEVEL from serializer board
P5	TRIGGER_LEVEL	O	Controls the polarity of the trigger input on the PicoBlade connector. 0: Trigger source level polarity is not inverted 1: Trigger source level polarity is inverted
P6	TRIGGER_SOURCE	O	Controls the source of the trigger signal that is forwarded to the sensor. 0: Disable trigger input 1: Sensor is triggered by the trigger signal that is applied to the PicoBlade I/O connector.
P7	RESERVED_7	O	Reserved

8 Sensor Clock Configuration

The sensor's input clock frequency can be configured via the clock generator Si5356A with the I2C address 0x70 (7-bit). The input clock of Si5356A (CLKIN, pin 4) is connected to an external crystal oscillator SG-210STF (25MHz). The generated frequency is output at CLKA0 (pin 25). The manufacturer's Clock Builder software tool can be used to generate the required settings.

For more information about Si5356A, please refer to the datasheet:
https://www.silabs.com/documents/public/data-sheets/si5356a-datasheet.pdf

9 I2C Devices

There are multiple I2C devices on the DFM 36AX568-ML sensor board. The following table describes the parts and their I2C addresses:

Address (7-bit)	Device	Description
0x1A	IMX568-AAQJ-C	Image Sensor
0x20	TCA6408A	I/O Expander
0x40 (*)	LCMXO3L-1300E	Trigger Control FPGA (configuration)
0x42 (*)	LCMXO3L-1300E	Trigger Control FPGA (control)
0x50	AT24C256C	EEPROM
0x57	AT24C02C	EEPROM
0x70	Si5356A	Clock Generator

(*) Only present on sensor board revision 2.00 or later.

10 Trigger Control FPGA

In order to handle complex trigger/strobe functions of the image sensor, a FPGA is present on sensor board revision 2.00 and above.

A reference driver implementation is available upon request.

DFM 36AX568-ML

All product and company names in this document may be trademarks and tradenames of their respective owners and are hereby acknowledged.

The Imaging Source Europe GmbH cannot and does not take any responsibility or liability for any information contained in this document. The source code presented in this document is exclusively used for didactic purposes. The Imaging Source does not assume any kind of warranty expressed or implied, resulting from the use of the content of this document or the source code.

The Imaging Source Company reserves the right to make changes in specifications, function or design at any time and without prior notice.

Last update: March 2024
© 2024 The Imaging Source Europe GmbH
All rights reserved. Reprint, also in parts, only allowed with permission of The Imaging Source Europe GmbH.

All weights and dimensions are approximate. Unless otherwise specified, the lenses shown in the context of cameras are not shipped with these cameras.

Headquarters:

The Imaging Source Europe GmbH
Überseetor 18, D-28217 Bremen, Germany
Phone: +49 421 33591-0

North & South America:

The Imaging Source, LLC
Suite 470, 4600 Park Road, Charlotte, NC 28209, United States
Phone: +1 877-462-4772

Asia Pacific:

The Imaging Source Asia Co., Ltd.
3F., No. 43-7/8, Zhongxing Road
Xizhi District, New Taipei City 221012, Taiwan
Phone: +886 2-2792-3153

www.theimagingsource.com