Technical Details

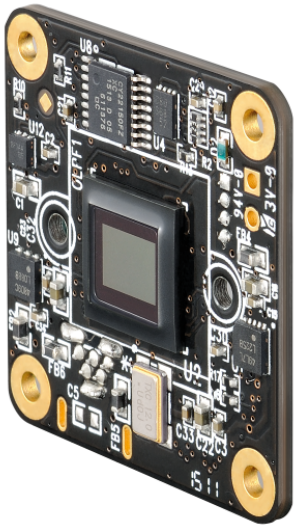

DFM 42BUC03-MLA
Technical Reference Manual

THE IMAGINGSOURCE
TECHNOLOGY BASED ON STANDARDS

Table of Contents

1. Quick Facts 3

2. Dimensional Diagrams 5

2.1 DFM 42BUC03-MLA Board Camera with Angled USB Connector 5

3. I/O Connector 6

3.1 4-pin I/O Connector 6

3.1.1 TRIGGER_IN 6

3.1.2 STROBE_OUT 6

4. Spectral Characteristics 7

4.1 Spectral Sensitivity - AR0134 7

5. Camera Controls 8

5.1 Sensor Readout Control 8

5.1.1 Pixel Format 8

5.1.1.1 8-Bit Bayer Raw 8

5.1.2 Frame Rate 8

5.1.3 Partial Scan Offset 9

5.2 Image Sensor Control 10

5.2.1 Exposure Time 10

5.2.2 Gain 10

5.3 Trigger 10

5.3.1 Trigger Mode 11

5.3.2 Software Trigger 11

5.4 Digital I/O 11

5.4.1 General Purpose Input 11

5.4.2 General Purpose Output 12

5.5 Strobe 12

5.5.1 Strobe Enable 12

5.5.2 Strobe Polarity 13

6. Revision History 14

1 Quick Facts

General	
Dynamic Range	8 bit
Resolution	1280x960
Frame Rate at Full Resolution	76
Pixel Formats	8-Bit Bayer (GR)

Optical Interface	
IR-Cut filter	No
Sensor Type	onsemi AR0134
Shutter Type	Global
Sensor Format	1/3 inch
Pixel Size	3.75 µm
Lens Mount	M12x0.5

Electrical Interface	
Interface	USB 2.0
Supply voltage	4.75 VDC to 5.25 VDC
Current consumption	approx 250 mA @ 5 VDC

Mechanical Data	
Dimensions	H: 30 mm, W: 30 mm, L: 15 mm
Mass	7 g

Adjustments	
Shutter	100 µs to 30 s
Gain	34 to 255

Environmental	
Temperature (operating)	-5 °C to 45 °C
Temperature (storage)	-20 °C to 60 °C
Humidity (operating)	20 % to 80 % (non-condensing)
Humidity (storage)	20 % to 95 % (non-condensing)

2 Dimensional Diagrams

2.1 DFM 42BUC03-MLA Board Camera with Angled USB Connector

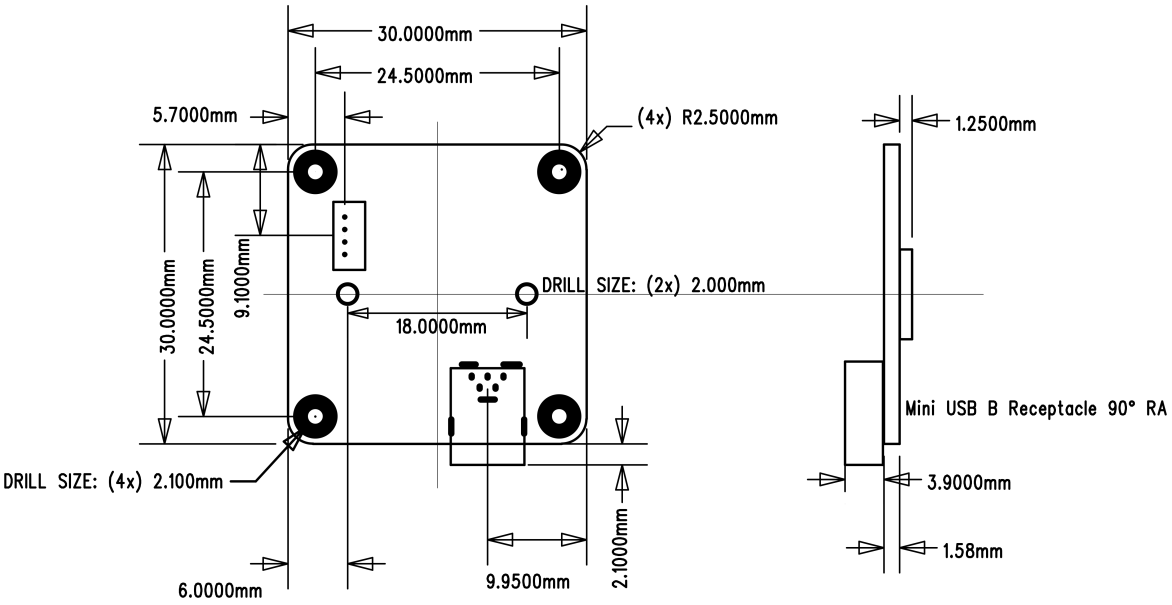

3 I/O Connector

3.1 4-pin I/O Connector

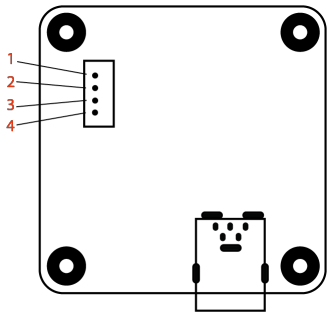

Rear view of camera

Pin	Signal	I/O	Remarks	Characteristics			
				Min	Typ	Max	Unit
1	TRIGGER_IN (-)	I[3]	Optocoupler ground	-	-	-	-
2	TRIGGER_IN (+)	I[3]	Optocoupler signal	3.3[2]	-	24.0[2]	V
3	GND_I/O	G[3]	External Ground	-	-	-	-
4	STROBE_OUT	O[3]	Open drain	-	-	24.0[1]	V

[1] max. 0.2A (ID) for open drain MOSFET!

[2] min. 3.5 mA driver strength required!

[3] G: Ground O: Output I: Input

The part number of this PicoBlade connector is Molex-53047-0410. To create an I/O cable, a PicoBlade connector (Molex-51021-0400) or a PicoBlade cable assembly (e.g. Molex-15134-0400) are required.

3.1.1 TRIGGER_IN

The *TRIGGER_IN* line can be used to synchronize the start of the exposure time with external events. The Trigger section describes in detail how the image sensor's behavior can be controlled.

The current input signal can also be read directly through the General Purpose Input feature.

3.1.2 STROBE_OUT

The *STROBE_OUT* line's main usage is to indicate the integration time of the image sensor which allows flashes, strobes or other light sources to be synchronized with camera operation. The line's behavior can be controlled through the Strobe controls.

The output signal can also be directly controlled through the General Purpose Output feature.

4 Spectral Characteristics

4.1 Spectral Sensitivity - AR0134

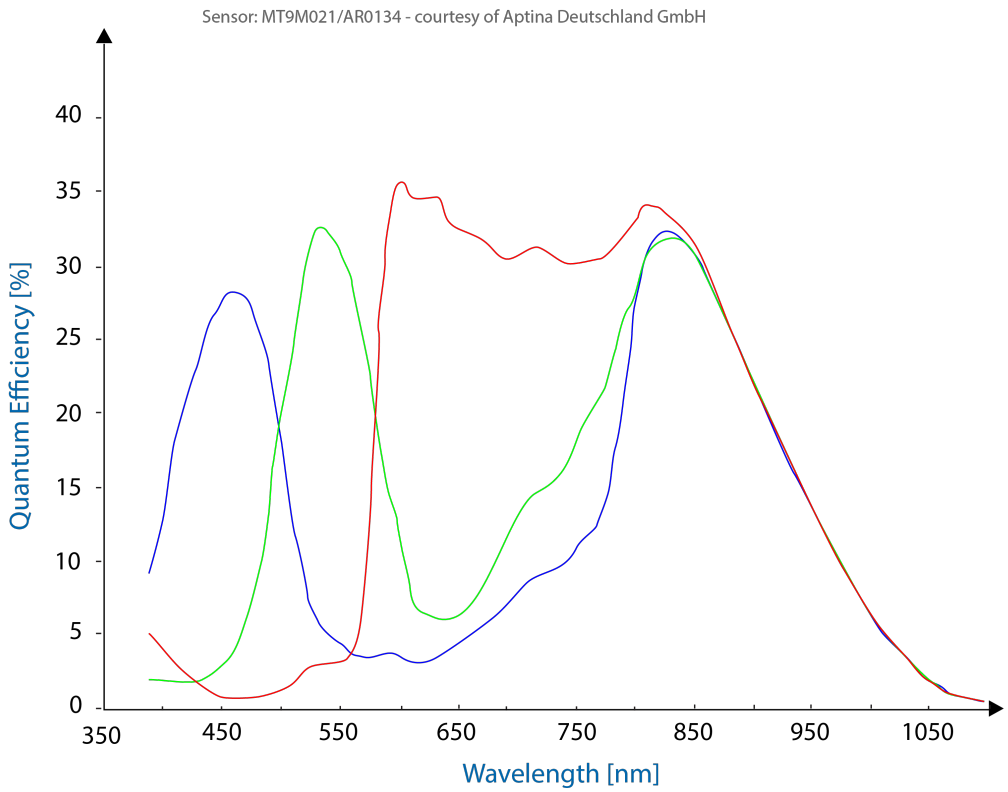

5 Camera Controls

This section describes the parameters available for the DFM 42BUC03-MLA camera.

The actual name of the parameter depends on the driver technology used to access the camera. Parameter names are listed for the most common ways to access the cameras:

- UVC/V4L2 (on Linux, via uvcvideo)
- *IC Imaging Control* (on Windows, via *Device Driver for USB Cameras*)

5.1 Sensor Readout Control

5.1.1 Pixel Format

The pixel format defines the data type of the pixels transmitted to the computer. The bits per pixel needed for a particular pixel format influence the required bandwith.

The driver technology used to access the camera significantly impacts the way the pixel format is controlled:

- When using the uvcvideo driver on Linux, the pixel format is defined by video4linux2.
- When using *IC Imaging Control*, the pixel format is part of the video format - a parameter which combines pixel format, resolution and readout mode. For more information, refer to the *IC Imaging Control* documentation sections on `VideoFormat` and `VideoFormatDesc`.

The DFM 42BUC03-MLA color camera supports multiple pixel formats with variable bits-per-pixel settings. The names of the pixel formats and the way to select them depends on the driver used to control the camera. The following table contains a short overview of all possible formats followed by a more detailed description.

Pixel Format	Bits Per Pixel	UVC	TIS UVC Driver
8-Bit Bayer (GR)	8	`GRBG`	`RGB32`, `Y800`

5.1.1.1 8-Bit Bayer Raw

This format transmits data using one byte for each pixel.

UVC drivers see it with the *FourCC* `GRBG`, `RGGB`, `GBRG` or `BA81`.

The *Device Driver for USB Cameras* simplifies this variety of possible pixel formats and offers two video formats instead: `RGB32` and `Y800`. The `RGB32` format results from the driver's automatic debayering of the raw image data, while the `Y800` format contains the raw data which is reinterpreted as monochrome.

5.1.2 Frame Rate

The frame rate is specified in frames per second and determines the camera's operating speed.

The way the frame rate is controlled depends greatly upon which driver technology is used to access the camera:

- When using uvcvideo on Linux, the frame rate is selected from a list of available frame rates.
- When using IC Imaging Control, the frame rate is selected from a list of available frame rates through APIs such as `Grabber::setFPS` or `ICImagingControl.DeviceFrameRate`.

The range of available frame rates depends upon other camera settings such as well, pixel format, resolution and readout modes.

Parameter	Frame Rate
Minimum	Depending on Pixel Format, Resolution, and Readout Mode
Maximum	Depending on Pixel Format, Resolution, and Readout Mode

The following tables show the maximum frame rate for some combinations of pixel format and resolution.

8-Bit Bayer Raw

Width	Height	Maximum Frame Rate
1280	960	25
640	480	48

5.1.3 Partial Scan Offset

If the selected resolution is smaller than the sensor size, the part of the sensor that is actually read out can be specified by the *Partial Scan Offset X* and *Partial Scan Offset Y* parameters. By default, the camera automatically positions the offsets so that the center of the sensor is used.

Parameter	Partial Scan Offset X
Minimum	0
Maximum	1280
Video4Linux2	`X Offset`
VCD Property	`VCDID_PartialScanOffset` `\VCDElement_PartialScanOffsetX`

Parameter	Partial Scan Offset Y
Minimum	0
Maximum	960
Video4Linux2	`Y Offset`
VCD Property	`VCDID_PartialScanOffset \VCDElement_PartialScanOffsetY`

5.2 Image Sensor Control

5.2.1 Exposure Time

The *Exposure Time* parameter defines the time the camera opens its (electronic) shutter when it is taking an image.

Parameter	Exposure Time
Minimum	100 µs
Maximum	30 s
Default	auto
Video4Linux2	`Exposure (Absolute)`
	The V4L2 `Exposure (Absolute)` control is using 100µs units
VCD Property	`VCDID_Exposure\VCDElement_Value`

5.2.2 Gain

The *Gain* parameter defines the amplification that is applied to the image at sensor level.

Parameter	Gain
Minimum	34
Maximum	255
Default	auto
Video4Linux2	`Gain`
VCD Property	`VCDID_Gain\VCDElement_Value`

5.3 Trigger

The trigger mode can be used to take images at very specific points in time which are specified by an electrical signal connected to the TRIGGER_IN pin of the I/O connector of the camera.

5.3.1 Trigger Mode

The *Trigger Mode* parameter enables the trigger mode.

Parameter	Trigger Mode
`On`	Enable Trigger Mode
`True`	
`Off`	Disable Trigger Mode
`False`	
Video4Linux2	`Trigger Mode`
VCD Property	`VCDID_Trigger\VCDElement_Value`

5.3.2 Software Trigger

The *Software Trigger* function can be used to simulate a trigger pulse, in turn causing one image to be exposed and delivered to the host computer.

Parameter	Software Trigger
Execute	Simulate one trigger pulse
Video4Linux2	`Software Trigger`
VCD Property	`VCDID_Trigger\VCDElement_SoftwareTrigger`

5.4 Digital I/O

The One4All series has one digital input and one digital output. The digital input can be used as a Trigger input but the current status can also examined directly.

The digital output can be configured as a Strobe output to signal the exact moment when the image sensor is sensitive to light so that external light sources can be synchronized to its operation cycle.

5.4.1 General Purpose Input

The *General Purpose Input* parameter allows the current status of the TRIGGER_IN pin.

Parameter	General Purpose Input
`True`	TRIGGER_IN line status is low
`1`	
`False`	TRIGGER_IN line status is high
`0`	
Video4Linux2	`ExtIO[1]`
VCD Property	`VCDID_GPIO\VCDElement_GPIORead` `VCDID_GPIO\VCDElement_GPIOIn`

5.4.2 General Purpose Output

The *General Purpose Output* parameter controls the status of the STROBE_OUT pin.

Parameter	General Purpose Output
`True`	Drive the STROBE_OUT line high
`1`	
`False`	Drive the STROBE_OUT line low
`0`	
Video4Linux2	`ExtIO[0]`
VCD Property	`VCDID_GPIO\VCDElement_GPIOWrite` `VCDID_GPIO\VCDElement_GPIOOut`

5.5 Strobe

The strobe function controls the automatic generation of output pulses on the STROBE_OUT pin which is synchronized to the image sensor's exposure time.

5.5.1 Strobe Enable

The *Strobe Enable* parameter enables the automatic generation of strobe pulses.

Parameter	Strobe Enable
`On`	Strobe enabled
`True`	
`Off`	Strobe disabled
`False`	
Video4Linux2	`Strobe[0]`
VCD Property	`VCDID_Strobe\VCDElement_Value`

5.5.2 Strobe Polarity

The *Strobe Polarity* parameter can be used to invert the strobe pulse output.

Parameter	Strobe Polarity
`ActiveHigh`	The STROBE_OUT pin is logically high during the exposure time
`True`	
`ActiveLow`	The STROBE_OUT pin is logically low during the exposure time
`False`	
Video4Linux2	`Strobe[1]`
VCD Property	`VCDID_Strobe\VCDElement_StrobePolarity`

6 Revision History

Date	Version	Description
2018/12/07		Initial release of this document

DFM 42BUC03-MLA Technical Reference Manual

All product and company names in this document may be trademarks and tradenames of their respective owners and are hereby acknowledged.

The Imaging Source Europe GmbH cannot and does not take any responsibility or liability for any information contained in this document. The source code presented in this document is exclusively used for didactic purposes. The Imaging Source does not assume any kind of warranty expressed or implied, resulting from the use of the content of this document or the source code.

The Imaging Source Company reserves the right to make changes in specifications, function or design at any time and without prior notice.

Last update: May 2023
© 2023 The Imaging Source
All rights reserved. Reprint, also in parts, only allowed with permission of The Imaging Source Europe GmbH.

All weights and dimensions are approximate. Unless otherwise specified, the lenses shown in the context of cameras are not shipped with these cameras.

Headquarters:

The Imaging Source Europe GmbH
Überseetor 18, D-28217 Bremen, Germany
Phone: +49 421 33591-0

North & South America:

The Imaging Source, LLC
Suite 470, 4600 Park Road, Charlotte, NC 28209, United States
Phone: +1 877-462-4772

Asia Pacific:

The Imaging Source Asia Co., Ltd.
3F., No. 43-7/8, Zhongxing Road
New Taipei City, Xizhi District 221012, Chinese Taipei
Phone: +886 2-2792-3153

www.theimagingsource.com