Technical Details

# DMK 33UJ003
# Technical Reference Manual

THE IMAGINGSOURCE
TECHNOLOGY BASED ON STANDARDS

# Table of Contents


1. Quick Facts 4

2. Dimensional Diagrams 6

2.1 DMK 33UJ003 C-Mount with Tripod Adapter ..... 6

2.2 DMK 33UJ003 C-Mount without Tripod Adapter ..... 7

2.3 DMK 33UJ003 CS-Mount with Tripod Adapter ..... 8

2.4 DMK 33UJ003 CS-Mount without Tripod Adapter ..... 9

3. I/O Connector 10

3.1 12-pin I/O Connector ..... 10

3.1.1 TRIGGER_IN ..... 11

3.1.2 STROBE_OUT ..... 11

4. Spectral Characteristics 12

4.1 Spectral Sensitivity - MT9J003 ..... 12

5. Camera Controls 13

5.1 Sensor Readout Control ..... 13

5.1.1 Pixel Format ..... 13

5.1.1.1 8-Bit Monochrome ..... 13

5.1.1.2 16-Bit Monochrome ..... 14

5.1.2 Resolution ..... 14

5.1.3 Readout Modes ..... 15

5.1.4 Frame Rate ..... 16

5.1.5 Partial Scan Offset ..... 17

5.1.6 Image Flipping ..... 19

5.2 Image Sensor Control ..... 19

5.2.1 Exposure Time ..... 19

5.2.2 Gain ..... 20

5.2.3 Black Level ..... 20

5.3 Automatic Exposure and Gain Control ..... 20

5.3.1 Auto Exposure ..... 21

5.3.2 Auto Gain ..... 21

5.3.3 Auto Reference Value ..... 21

5.3.4 Highlight Reduction ..... 22

5.3.5 Auto Exposure Limits ..... 22

5.3.6 Auto Gain Limits ..... 23

5.4 Trigger ..... 24

5.4.1 Trigger Mode ..... 24

5.4.2 Trigger Polarity ..... 24

5.4.3 Trigger Operation ..... 25

5.4.4 Software Trigger ..... 25

5.4.5 Trigger Burst Count ..... 26

5.4.6 Trigger Source ..... 26
5.4.7 Trigger Overlap ..... 27
5.4.8 Trigger Delay ..... 27
**5.5 Trigger Timing Parameters ..... 27**
5.5.1 Trigger Debounce Time ..... 28
5.5.2 Trigger Mask Time ..... 28
5.5.3 Trigger Noise Suppression Time ..... 28
**5.6 Digital I/O ..... 29**
5.6.1 General Purpose Input ..... 29
5.6.2 General Purpose Output ..... 29
**5.7 Strobe ..... 30**
5.7.1 Strobe Enable ..... 30
5.7.2 Strobe Polarity ..... 30
5.7.3 Strobe Operation ..... 31
**5.8 Image Processing ..... 31**
5.8.1 Gamma ..... 31
5.8.2 Lookup Table ..... 32
**5.9 Region of Interest for Auto Functions ..... 33**
5.9.1 Auto Functions ROI Enable ..... 33
5.9.2 Auto Functions ROI Preset ..... 34
5.9.3 Auto Functions ROI Custom Rectangle ..... 34
**5.10 User Sets ..... 35**
5.10.1 User Set Selector ..... 36
5.10.2 Load User Set ..... 36
5.10.3 Save User Set ..... 36
5.10.4 Default User Set ..... 37
**5.11 Timestamp Control ..... 37**
5.11.1 Timestamp Latch ..... 37
5.11.2 Timestamp Latch Value ..... 37
5.11.3 Timestamp Reset ..... 38
**5.12 Events ..... 38**
5.12.1 Event Selector ..... 38
5.12.2 Event Notification ..... 38
5.12.3 Event Frame Trigger Missed ..... 39
5.12.4 Event Line1 Falling Edge ..... 39
5.12.5 Event Line1 Rising Edge ..... 40
5.12.6 Event Test ..... 40
**5.13 Bandwidth Control ..... 41**
5.13.1 Device Link Throughput Limit Mode ..... 41
5.13.2 Device Link Throughput Limit ..... 41

**6. Revision History 43**

# 1 Quick Facts

| General | |
|---|---|
| Vision Standard | USB3 Vision |
| Dynamic Range | 12 bit |
| Resolution | 3856x2764 |
| Frame Rate at Full Resolution | 14 |
| Pixel Formats | 8-Bit Monochrome<br>16-Bit Monochrome |

| Optical Interface | |
|---|---|
| IR-Cut filter | No |
| Sensor Type | onsemi MT9J003 |
| Shutter Type | Rolling |
| Sensor Format | 1/2.3 inch |
| Pixel Size | 1.67 µm |
| Lens Mount | C/CS |

| Electrical Interface | |
|---|---|
| Interface | USB 3.0 |
| Supply Voltage | 4.75 VDC to 5.25 VDC |
| Current Consumption | approx 770 mA @ 5 VDC |
| I/O Connector | 12-pin connector for trigger and strobe or general purpose input/output |

| Mechanical Data | |
|---|---|
| Dimensions | H: 29 mm, W: 29 mm, L: 43 mm |
| Mass | 65 g |

| Adjustments | |
|---|---|
| Shutter | 100 µs to 30 s |
| Gain | 0 dB to 5,83 dB |

| Environmental Conditions | |
|---|---|
| Housing Temperature (operating) | -5 °C to 50 °C |
| Temperature (storage) | -20 °C to 80 °C |
| Humidity (operating) | 20 % to 80 % (non-condensing) |
| Humidity (storage) | 20 % to 95 % (non-condensing) |

# 2 Dimensional Diagrams

## 2.1 DMK 33UJ003 C-Mount with Tripod Adapter

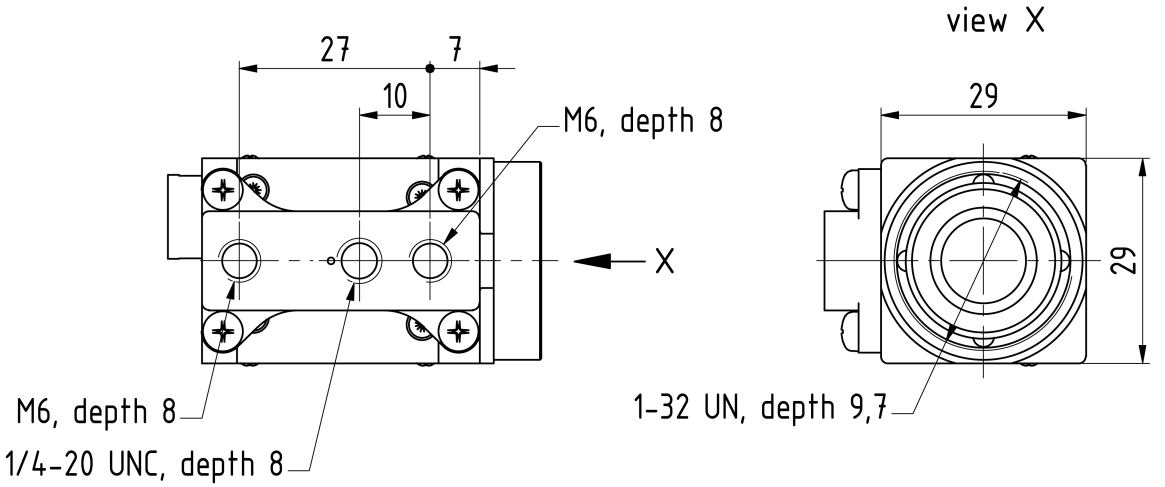


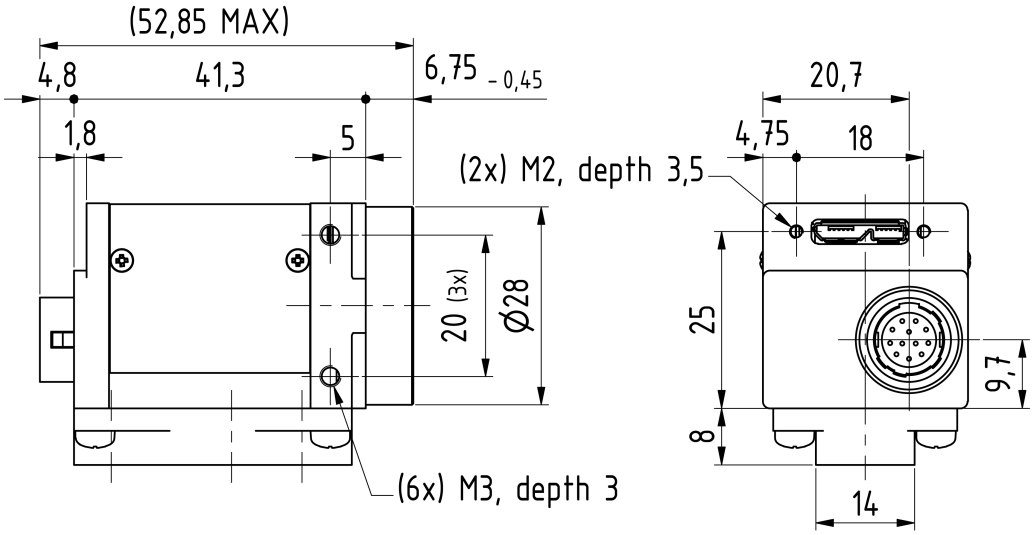


Dimensions: mm
Tolerances: DIN ISO 2768-f

## 2.2 DMK 33UJ003 C-Mount without Tripod Adapter

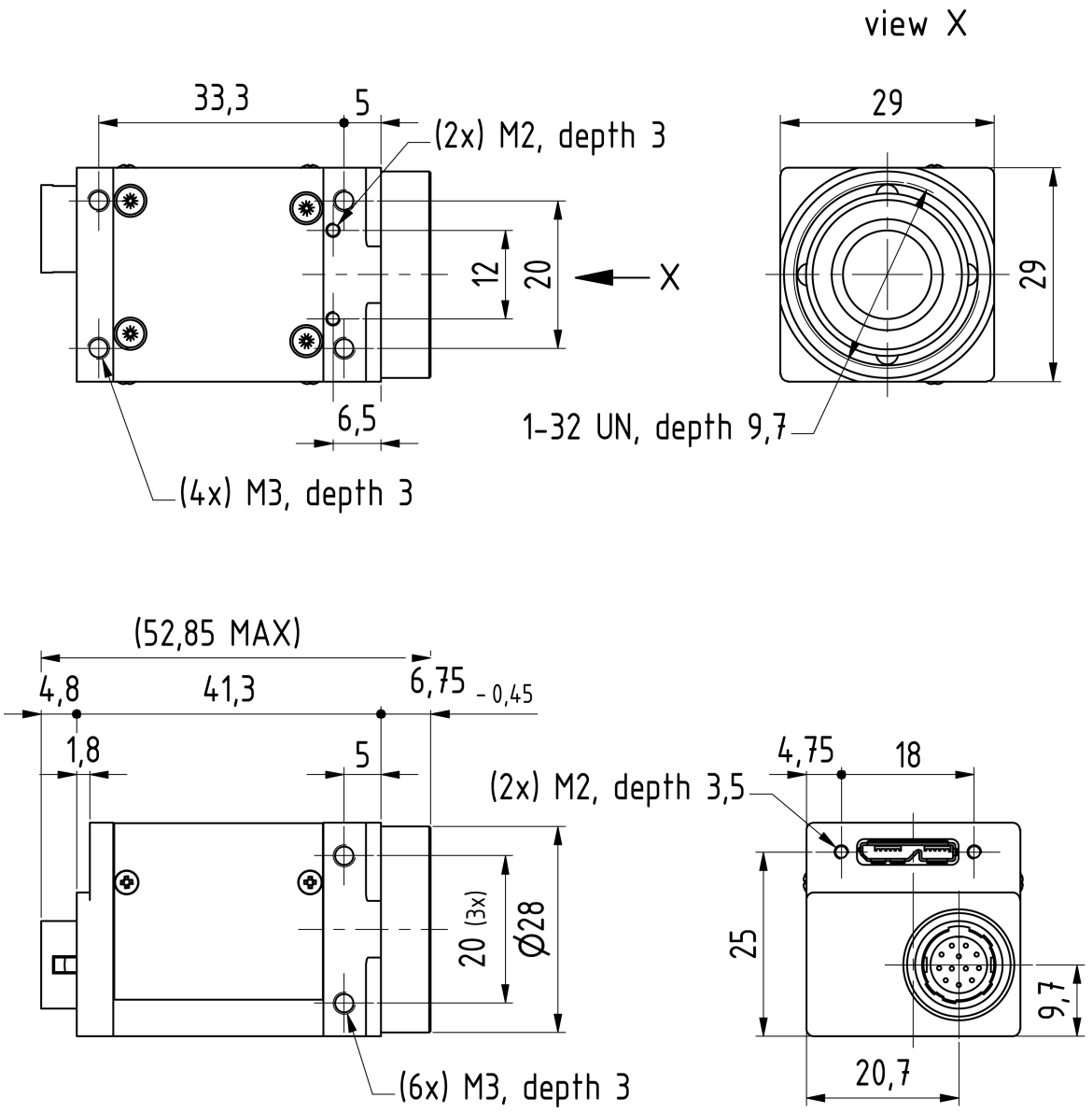


Dimensions: mm
Tolerances: DIN ISO 2768-f

## 2.3 DMK 33UJ003 CS-Mount with Tripod Adapter

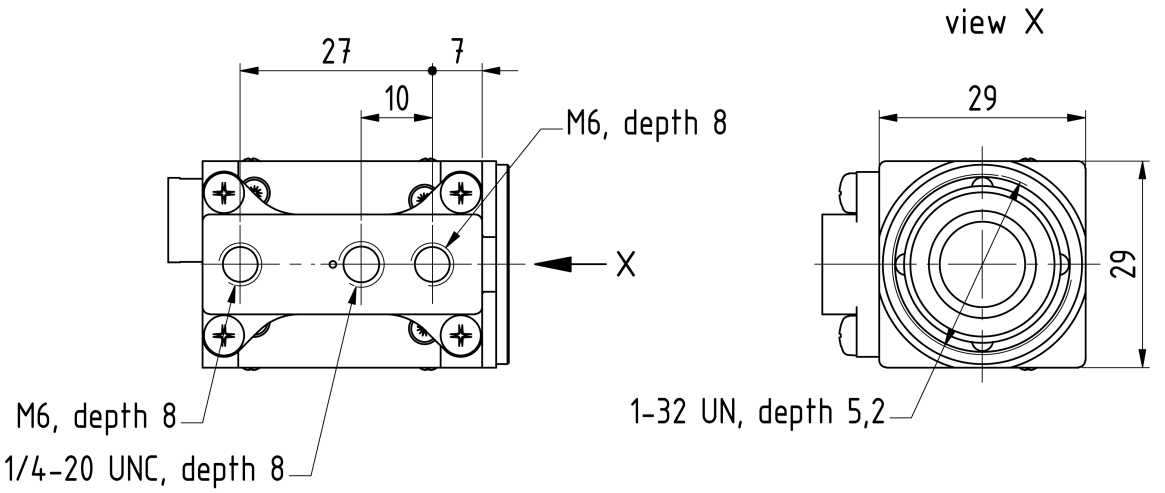


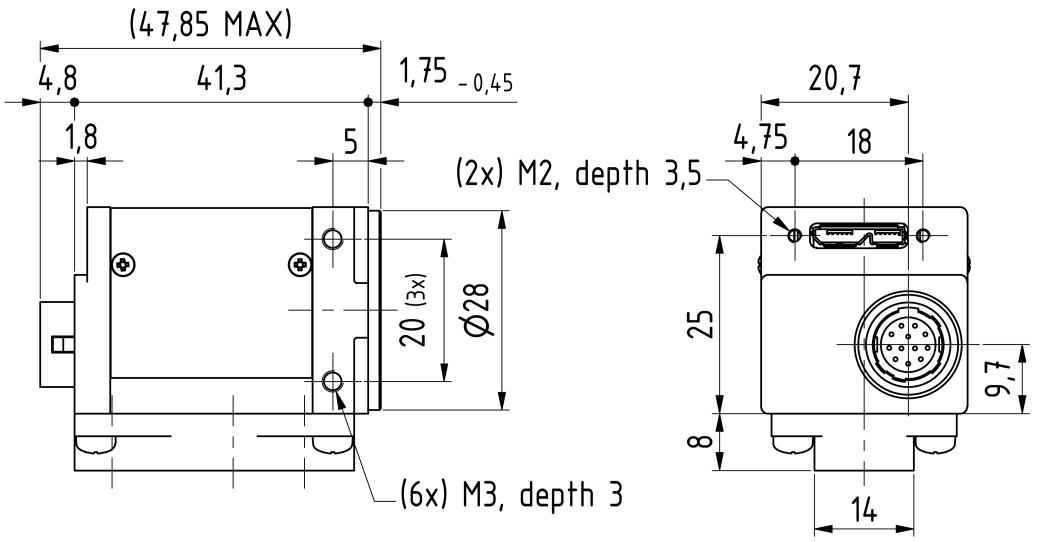


Dimensions: mm
Tolerances: DIN ISO 2768-f

## 2.4 DMK 33UJ003 CS-Mount without Tripod Adapter

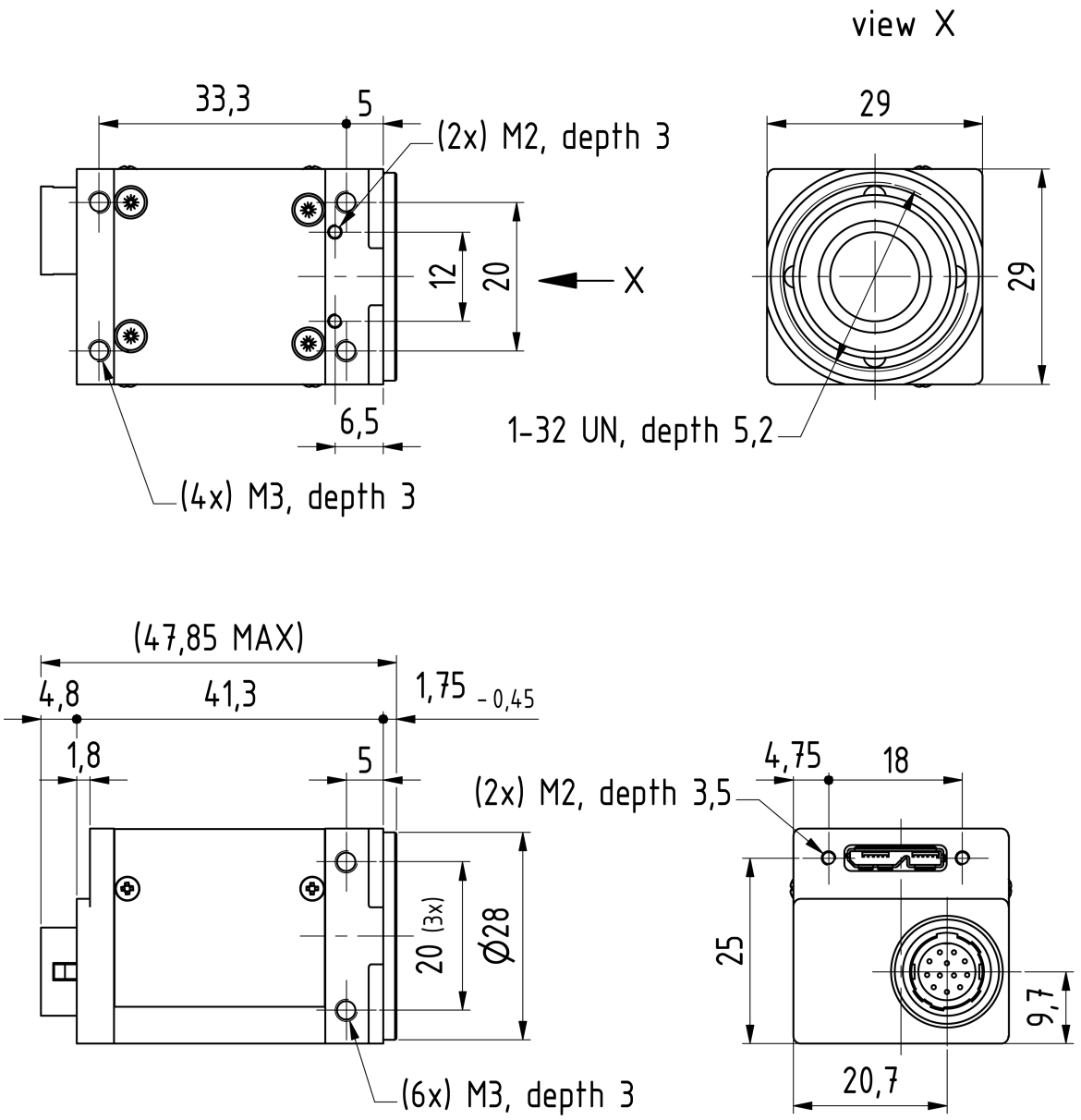


Dimensions: mm
Tolerances: DIN ISO 2768-f

# 3 I/O Connector

## 3.1 12-pin I/O Connector

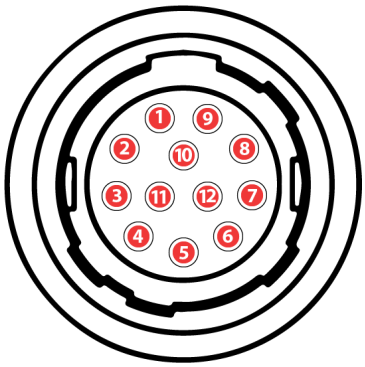


Rear view of camera

| Pin | Signal | I/O | Remarks | Characteristics | | | |
|---|---|---|---|---|---|---|---|
| | | | | Min | Typ | Max | Unit |
| 1 | do not use | | - | - | - | - | - |
| 2 | do not use | | - | - | - | - | - |
| 3 | n.c. | | - | - | - | - | - |
| 4 | n.c. | | - | - | - | - | - |
| 5 | n.c. | | - | - | - | - | - |
| 6 | n.c. | | - | - | - | - | - |
| 7 | GND_I/O | G[3] | External Ground | - | - | - | - |
| 8 | n.c. | | - | - | - | - | - |
| 9 | n.c. | | - | - | - | - | - |
| 10 | STROBE_OUT | O[3] | Open drain | - | - | 24.0[1] | V |
| 11 | TRIGGER_IN (+) | I[3] | Optocoupler signal | 3.3[2] | - | 24.0[2] | V |
| 12 | TRIGGER_IN (-) | I[3] | Optocoupler ground | - | - | - | - |

[1] max. 0.2A (ID) for open drain MOSFET!

[2] min. 3.5 mA driver strength required!

[3] G: Ground O: Output I: Input

The part number of this Hirose connector is HR10A10R-12P(73). To create an I/O cable you need a Hirose connector HR10A-10P-12S(73).

### 3.1.1 TRIGGER_IN

The *TRIGGER_IN* line can be used to synchronize the start of the exposure time with external events. The Trigger section describes in detail how the image sensor's behavior can be controlled.

The current input signal can also be read directly through the General Purpose Input feature.

### 3.1.2 STROBE_OUT

The *STROBE_OUT* line's main usage is to indicate the integration time of the image sensor which allows flashes, strobes or other light sources to be synchronized with camera operation. The line's behavior can be controlled through the Strobe controls.

The output signal can also be directly controlled through the General Purpose Output feature.

# 4 Spectral Characteristics

## 4.1 Spectral Sensitivity - MT9J003

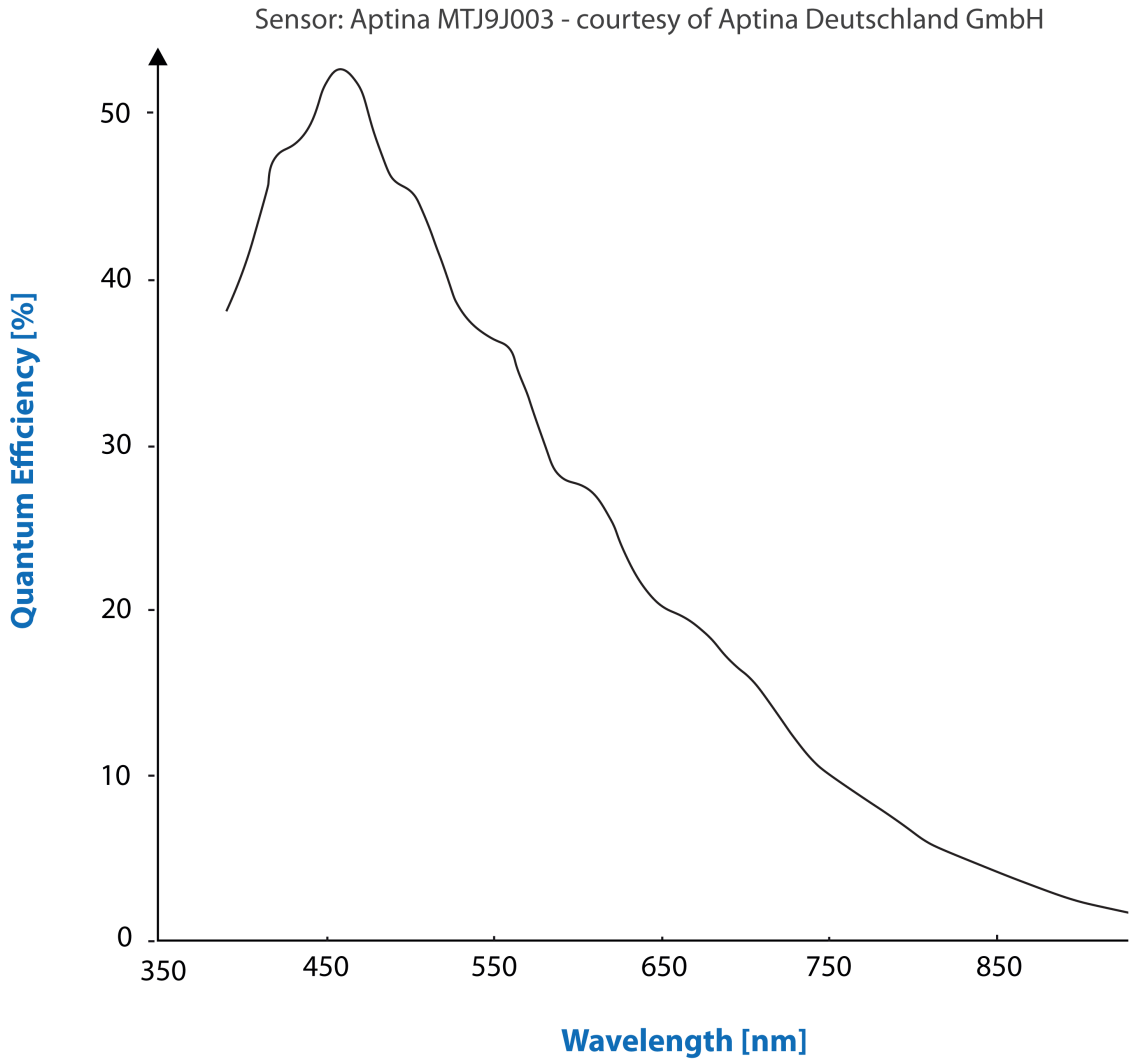

# 5 Camera Controls

This section describes the parameters available for the DMK 33UJ003 camera.

The actual name of the parameter depends on the driver technology used to access the camera. Parameter names are listed for the most common ways to access the cameras:

- *USB3 Vision* (*IC Imaging Control 4*, or via 3rd party driver)
- UVC/V4L2 (on Linux, via uvcvideo)
- *IC Imaging Control 3.x* (on Windows, via *Device Driver for The Imaging Source USB 33U, 37U and 38U Cameras*)

Please note: When the camera is connected to a USB2 controller and used in V4L2 mode or by *IC Imaging Control 3.x*, read requests can lead to frame drops. Avoid reading camera features to ensure a stable image transmission.

## 5.1 Sensor Readout Control

### 5.1.1 Pixel Format

The pixel format defines the data type of the pixels transmitted to the computer. The bits per pixel needed for a particular pixel format influence the required bandwith.

The way the pixel format is controlled varies significantly among the driver technology used to access the camera:

- When using *IC Imaging Control 4* or *USB3 Vision*, the pixel format is controlled through the `PixelFormat` *GenICam* feature.
- When using the *uvcvideo* driver on Linux, the pixel format is defined by video4linux2.
- When using *IC Imaging Control 3.x*, the pixel format is part of the video format - a parameter which combines pixel format, resolution and readout mode. For more information, refer to the *IC Imaging Control 3.x* documentation sections on `VideoFormat` and `VideoFormatDesc`.

The DMK 33UJ003 monochrome camera supports multiple pixel formats with variable bits-per-pixel settings. The names of the pixel formats and the way to select them depends on the driver used to control the camera. The following table contains a short overview of all possible formats followed by a more detailed description.

| Pixel Format | Bits Per Pixel | USB3 Vision | UVC | TIS UVC Driver |
|---|---|---|---|---|
| 8-Bit Monochrome | 8 | `Mono8` | `Y800` | `Y800` |
| 16-Bit Packed Monochrome | 16 | `Mono16` | `Y16` | `Y16` |

#### 5.1.1.1 8-Bit Monochrome

This format transmits data using one byte for each pixel.

*USB3 Vision* drivers see this pixel format as `Mono8`.

UVC drivers see it with the *FourCC* `Y800`.

The *Device Driver for The Imaging Source USB 33U, 37U and 38U Cameras* offers this pixel format as the `Y800` video format.

#### 5.1.1.2 16-Bit Monochrome

The sensor of the DMK 33UJ003 camera is not capable of providing 16-bit data output. Instead, the pixel data is transmitted in the most significant bits which allows application programs to ignore the sensor-specific data type, and treat the data as if the sensor outputs 16 bits.

*USB3 Vision* drivers see this pixel format as `Mono16`.

UVC drivers see it with the *FourCC* `Y16`.

The *Device Driver for The Imaging Source USB 33U, 37U and 38U Cameras* offers this pixel format as the `Y16` video format.

### 5.1.2 Resolution

The DMK 33UJ003 allows the user to specify which rectangular region of the image sensor to read out during camera operation. The size of this rectangle determines the number of pixels that have to be transferred for each frame and has a significant influence on the required USB bandwidth.

Lowering the resolution also often allows the image sensor to operate at a higher frame rate. Changes in the vertical resolution have more effect on the maximum frame rate than changes in the horizontal direction.

The way the resolution is controlled varies greatly between the driver technology used to access the camera:

- When using *USB3 Vision*, the resolution is controlled through the GenICam features Width and Height.
- When using the uvcvideo on Linux, the resolution is selected from a list of fixed formats. Dynamic frame sizes are not available.
- When using *IC Imaging Control*, the resolution is part of the video format, a parameter that combines pixel format, resolution and readout mode. For more information, refer to the *IC Imaging Control* documentation sections on `VideoFormat` and `VideoFormatDesc`.

| Parameter | Horizontal Resolution |
|---|---|
| Minimum | 256 |
| Maximum | 3856 |
| Increment | 16 |
| USB3 Vision: GenICam | `Width` |
| Type | Integer |

| Parameter | Vertical Resolution |
|---|---|
| Minimum | 256 |
| Maximum | 2764 |
| Increment | 2 |
| USB3 Vision: GenICam | `Height` |
| Type | Integer |

### 5.1.3 Readout Modes

The DMK 33UJ003 camera offers different sensor readout modes.

By default, the camera outputs all pixels of the image sensor.

In *skipping* modes, the image sensor regularly skips a number of rows and/or columns during readout. The resulting output image is smaller but contains the same field of view than the image produced by default readout mode.

In *binning* modes, a number of neighboring pixels is merged into one output pixel during readout. The nature of this merge operation is sensor-specific, most sensors either add the pixel values or average them.

Generally, binning modes provide better image quality than skipping modes. However, skipping modes usually provide a higher maximum frame rate.

The way the readout modes are controlled depends greatly upon which driver technology is used to access the camera:

- When using *USB3 Vision*, the readout mode is controlled through the *GenICam* features `DecimationHorizontal`, `DecimationVertical`, `BinningHorizontal` and `BinningVertical`.
- When using *IC Imaging Control*, the readout mode is part of the video format - a parameter that which combines pixel format, resolution and readout mode. For more information, refer to the *IC Imaging Control* documentation sections on `VideoFormat` and `VideoFormatDesc`.

The following readout modes are supported:

- Default
- Skipping 2X
- Skipping 4X
- Binning 2X
- Binning 4X

| Parameter | Binning Horizontal |
|---|---|
| Valid Values | 1, 2, 4 |
| USB3 Vision: GenICam | `BinningHorizontal` |
| Type | Integer |

| Parameter | Binning Vertical |
|---|---|
| Valid Values | 1, 2, 4 |
| USB3 Vision: GenICam | `BinningVertical` |
| Type | Integer |

| Parameter | Skipping Horizontal |
|---|---|
| Valid Values | 1, 2, 4 |
| USB3 Vision: GenICam | `DecimationHorizontal` |
| Type | Integer |

| Parameter | Skipping Vertical |
|---|---|
| Valid Values | 1, 2, 4 |
| USB3 Vision: GenICam | `DecimationVertical` |
| Type | Integer |

### 5.1.4 Frame Rate

The frame rate is specified in frames per second and determines the camera's operating speed.

The way the frame rate is controlled depends greatly upon which driver technology is used to access the camera:

- When using *USB3 Vision*, the frame rate is controlled through the *GenICam* feature `AcquisitionFrameRate`.
- When using uvcvideo on Linux, the frame rate is selected from a list of available frame rates.
- When using IC Imaging Control, the frame rate is selected from a list of available frame rates through APIs such as `Grabber::setFPS` or `ICImagingControl.DeviceFrameRate`.

The range of available frame rates depends upon other camera settings such as well, pixel format, resolution and readout modes.

| Parameter | Frame Rate |
|---|---|
| Minimum | Depending on Pixel Format, Resolution, and Readout Mode |
| Maximum | Depending on Pixel Format, Resolution, and Readout Mode |
| USB3 Vision: GenICam | `AcquisitionFrameRate` |
| Type | Float |

**Please note:** Enabling Device Link Throughput Limit Mode can limit the frame rate below the configured value.

The following tables show the maximum frame rate for some combinations of pixel format and resolution.

**8-Bit Monochrome**

| Width | Height | Maximum Frame Rate |
|---|---|---|
| 3856 | 2764 | 14 |
| 1920 | 1080 | 66 |
| 640 | 480 | 172 |

**16-Bit Monochrome**

| Width | Height | Maximum Frame Rate |
|---|---|---|
| 3856 | 2764 | 14 |
| 1920 | 1080 | 66 |
| 640 | 480 | 172 |

### 5.1.5 Partial Scan Offset

If the selected resolution is smaller than the sensor size, the part of the sensor that is actually read out can be specified by the *Partial Scan Offset X* and *Partial Scan Offset Y* parameters. By default, the camera automatically positions the offsets so that the center of the sensor is used.

| Parameter | Partial Scan Offset X |
|---|---|
| Minimum | 0 |
| Maximum | 3600 |
| Increment | 2 |
| USB3 Vision: GenICam | `OffsetX` |
| Type | Integer |
| Video4Linux2 | `ROI Offset X` |
| VCD Property | `VCDID_PartialScanOffset`<br>`\VCDElement_PartialScanOffsetX` |

| Parameter | Partial Scan Offset Y |
|---|---|
| Minimum | 0 |
| Maximum | 2508 |
| Increment | 2 |
| USB3 Vision: GenICam | `OffsetY` |
| Type | Integer |
| Video4Linux2 | `ROI Offset Y` |
| VCD Property | `VCDID_PartialScanOffset`<br>`\VCDElement_PartialScanOffsetY` |

If *Partial Scan Offset X* or *Partial Scan Offset Y* is configured to a value that would be invalid with the current setting of Resolution setting, the camera uses the maximum possible value.

| Parameter | Partial Scan Auto Center |
|---|---|
| `On` | Automatically configure Partial Scan Offset X/Y so that the center area of the sensor is read out |
| `True` | |
| `Off` | Control Partial Scan Offset X/Y manually |
| `False` | |
| USB3 Vision: GenICam | `OffsetAutoCenter` |
| Type | Boolean |
| Video4Linux2 | `ROI Auto Center` |
| VCD Property | `VCDID_PartialScanOffset`<br>`\VCDElement_PartialScanAutoCenter` |

### 5.1.6 Image Flipping

The DMK 33UJ003 camera allows flipping of the image data horizontally, vertically, or both. The *Flip Horizontal* and *Flip Vertical* parameters can be used to control this sensor feature.

| Parameter | Flip Horizontal |
|---|---|
| `True` | Image data is flipped horizontally |
| `False` | Image data is not flipped horizontally |
| USB3 Vision: GenICam | `ReverseX` |
| Type | Boolean |
| Video4Linux2 | `Flip Horizontal` |
| VCD Property | `VCDID_FlipHorizontal\VCDElement_Value` |

| Parameter | Flip Vertical |
|---|---|
| `True` | Image data is flipped vertically |
| `False` | Image data is not flipped vertically |
| USB3 Vision: GenICam | `ReverseY` |
| Type | Boolean |
| Video4Linux2 | `Flip Vertical` |
| VCD Property | `VCDID_FlipVertical\VCDElement_Value` |

## 5.2 Image Sensor Control

### 5.2.1 Exposure Time

The *Exposure Time* parameter defines the time the camera opens its (electronic) shutter when it is taking an image.

| Parameter | Exposure Time |
|---|---|
| Minimum | 100 µs |
| Maximum | 30 s |
| Default | auto |
| USB3 Vision: GenICam | `ExposureTime` |
| Type | Float |
| Video4Linux2 | `Exposure Time (us)` |
| VCD Property | `VCDID_Exposure\VCDElement_Value` |

### 5.2.2 Gain

The *Gain* parameter defines the amplification that is applied to the image at sensor level.

| Parameter | Gain |
|---|---|
| Minimum | 0 dB |
| Maximum | 5,83 dB |
| Default | auto |
| USB3 Vision: GenICam | `Gain` |
| Type | Float |
| Video4Linux2 | `Gain (db/100)` |
| VCD Property | `VCDID_Gain\VCDElement_Value` |

### 5.2.3 Black Level

The *Black Level* parameter defines the lowest possibly intensity value of the image sensor.

| Parameter | Black Level |
|---|---|
| Minimum | 0 |
| Maximum | 4095 |
| Default | 40 |
| USB3 Vision: GenICam | `BlackLevel` |
| Type | Float |
| Video4Linux2 | `Brightness` |
| VCD Property | `VCDID_Brightness\VCDElement_Value` |

## 5.3 Automatic Exposure and Gain Control

The DMK 33UJ003 camera can automatically control gain and exposure time. These automatic functions are enabled by default.

In order to optimize image parameters, a region of interest can be specified for automatic functions. Specifying a region of interest enables fine-grained control over the image area for which the image parameters are optimized. A selection of pre-defined area presets is available, but the user can also specify the coordinates of a custom rectangle.

In certain situations, it is desirable to limit the range of the auto-controlled parameters. For example, one might want to avoid high gain settings in order to keep noise levels low. Other applications require limiting the maximum exposure time so that movements do not get blurred. Therefore, the ranges of the gain and exposure parameter can be limited.

If both auto exposure and auto gain are active, the camera tries to lower the gain value in order to reduce noise and improve the image quality.

### 5.3.1 Auto Exposure

| Parameter | Auto Exposure |
|---|---|
| `Continuous` | Enable Auto Exposure |
| `True` | |
| `Off` | Disable Auto Exposure |
| `False` | |
| USB3 Vision: GenICam | `ExposureAuto` |
| Type | Enumeration |
| Video4Linux2 | `Auto Shutter` |
| VCD Property | `VCDID_Exposure\VCDElement_Auto` |

### 5.3.2 Auto Gain

| Parameter | Auto Gain |
|---|---|
| `Continuous` | Enable Auto Gain |
| `True` | |
| `Off` | Disable Auto Gain |
| `False` | |
| USB3 Vision: GenICam | `GainAuto` |
| Type | Enumeration |
| Video4Linux2 | `Auto Gain` |
| VCD Property | `VCDID_Gain\VCDElement_Auto` |

### 5.3.3 Auto Reference Value

The *Auto Reference Value* parameter specifies the target brightness for both auto exposure and auto gain.

| Parameter | Auto Reference Value |
|---|---|
| Minimum | 0 |
| Maximum | 255 |
| Default | 128 |
| USB3 Vision: GenICam | `ExposureAutoReference` |
| Type | Integer |
| Video4Linux2 | `ExposureAutoReference` |
| VCD Property | `VCDID_Exposure\VCDElement_AutoReference` |

### 5.3.4 Highlight Reduction

Enabling *Highlight Reduction* lets the auto exposure and auto gain functions reduce overexposed areas in the output image. This feature is particularly useful when using 10/12/16-bit output images and a tone mapping algorithm in post-processing when using higher bit depths as the dark areas still contain a lot of useful information.

| Parameter | Highlight Reduction |
|---|---|
| `True` | Try to reduce overexposed areas |
| `False` | Ignore overexposed areas and focus on matching the image brightness to the selected Auto Reference Value. |
| USB3 Vision: GenICam | `ExposureAutoHighlightReduction` |
| Type | Boolean |
| Video4Linux2 | `Highlight Reduction` |
| VCD Property | `VCDID_HighlightReduction\VCDElement_Value` |

### 5.3.5 Auto Exposure Limits

The *Auto Exposure Lower Limit* parameter determines the minimum possible value that can be set by the auto exposure algorithm.

| Parameter | Auto Exposure Lower Limit |
|---|---|
| Minimum | 100 µs |
| Maximum | 1 s |
| USB3 Vision: GenICam | `ExposureAutoLowerLimit` |
| Type | Float |
| Video4Linux2 | `Exposure Auto Lower Limit` |

The *Auto Exposure Upper Limit* parameter determines the maximum possible value that can be set by the auto exposure algorithm.

| Parameter | Auto Exposure Upper Limit |
|---|---|
| Minimum | 100 µs |
| Maximum | 1 s |
| USB3 Vision: GenICam | `ExposureAutoUpperLimit` |
| Type | Float |
| Video4Linux2 | `Exposure Auto Upper Limit` |
| VCD Property | `VCDID_Exposure\VCDElement_AutoMaxValue` |

If the *Auto Exposure Upper Limit Auto* parameter is enabled, the value of *Auto Exposure Upper Limit* is automatically kept at the maximum possible value for the current frame rate.

| Parameter | Auto Exposure Upper Limit Auto |
|---|---|
| `On` | Select *Auto Exposure Upper Limit* automatically |
| `Off` | Let the user control *Auto Exposure Upper Limit* |
| USB3 Vision: GenICam | `ExposureAutoUpperLimitAuto` |
| Type | Enumeration |
| Video4Linux2 | `Exposure Auto Upper Limit Auto` |
| VCD Property | `VCDID_Exposure\VCDElement_AutoMaxValueAuto` |

### 5.3.6 Auto Gain Limits

The *Auto Gain Lower Limit* parameter determines the minimum possible value that can be set by the auto gain algorithm.

| Parameter | Auto Gain Lower Limit |
|---|---|
| Minimum | 0 dB |
| Maximum | 5,83 dB |
| USB3 Vision: GenICam | `GainAutoLowerLimit` |
| Type | Float |
| Video4Linux2 | `Gain Auto Lower Limit` |

The *Auto Gain Upper Limit* parameter determines the maximum possible value that can be set by the auto gain algorithm.

| Parameter | Auto Gain Upper Limit |
|---|---|
| Minimum | 0 dB |
| Maximum | 5,83 dB |
| USB3 Vision: GenICam | `GainAutoUpperLimit` |
| Type | Float |
| Video4Linux2 | `Gain Auto Upper Limit` |

## 5.4 Trigger

The trigger mode can be used to take images at very specific points in time which are specified by an electrical signal connected to the TRIGGER_IN pin of the I/O connector of the camera.

### 5.4.1 Trigger Mode

The *Trigger Mode* parameter enables the trigger mode.

| Parameter | Trigger Mode |
|---|---|
| `On` | Enable Trigger Mode |
| `True` | |
| `Off` | Disable Trigger Mode |
| `False` | |
| USB3 Vision: GenICam | `TriggerMode` |
| Type | Enumeration |
| Video4Linux2 | `Trigger Mode` |
| VCD Property | `VCDID_Trigger\VCDElement_Value` |

### 5.4.2 Trigger Polarity

The *Trigger Polarity* parameter controls whether a trigger event is accepted on the rising or falling edge of the signal connected to the TRIGGER_IN line.

| Parameter | Trigger Polarity |
|---|---|
| `RisingEdge` | Accept rising edge as trigger signal |
| `True` | |
| `FallingEdge` | Accept falling edge as trigger signal |
| `False` | |
| USB3 Vision: GenICam | `TriggerActivation` |
| Type | Enumeration |
| Video4Linux2 | `Trigger Polarity` |
| VCD Property | `VCDID_Trigger\VCDElement_Polarity` |

### 5.4.3 Trigger Operation

The *Trigger Operation* parameter controls the operation mode of the sensor in trigger mode.

Rolling shutter sensors can use the *Global Reset Release* mode when being triggered. In this mode, the integration time starts simultaneously for all lines. At the end of the nominal exposure time, the sensor then stops integrating and starts reading out the lines - as it is typical for a rolling shutter. Therefore, every line has a slightly longer actual exposure time than the line above it.

| Parameter | Trigger Operation |
|---|---|
| `Default` | Default mode |
| `GlobalResetRelease` | Use Global Reset Release mode |
| USB3 Vision: GenICam | `TriggerOperation` |
| Type | Enumeration |
| Video4Linux2 | `Trigger Operation` |
| VCD Property | `VCDID_Trigger\VCDElement_TriggerOperation` |

### 5.4.4 Software Trigger

The *Software Trigger* function can be used to simulate a trigger pulse, in turn causing one image to be exposed and delivered to the host computer.

| Parameter | Software Trigger |
|---|---|
| Execute | Simulate one trigger pulse |
| USB3 Vision: GenICam | `TriggerSoftware` |
| Type | Command |
| Video4Linux2 | `Software Trigger` |
| VCD Property | `VCDID_Trigger\VCDElement_SoftwareTrigger` |

### 5.4.5 Trigger Burst Count

The *Trigger Burst Count* parameter allows the camera to be configured to take more than one image per trigger pulse. By default, this parameter is set to 1 so that exactly one image is acquired. The images are taken as rapidly as possible given current settings (i.e. as limited by the current exposure time and frame rate settings).

| Parameter | Trigger Burst Count |
|---|---|
| Minimum | 1 |
| Maximum | 65535 |
| Default | 1 |
| USB3 Vision: GenICam | `AcquisitionBurstFrameCount` |
| Type | Integer |
| Video4Linux2 | `Trigger Burst Count` |
| VCD Property | `VCDID_Trigger\VCDElement_TriggerBurstCount` |

### 5.4.6 Trigger Source

The *Trigger Source* parameter allows the camera to be configured to only accept trigger signals from a specified source, e.g. only software trigger.

| Parameter | Trigger Source |
|---|---|
| `Any` | Allow trigger signals from any source |
| `Line1` | Allow only hardware trigger |
| `Software` | Allow only software trigger |
| USB3 Vision: GenICam | `TriggerSource` |
| Type | Enumeration |

### 5.4.7 Trigger Overlap

The *Trigger Overlap* feature gives information on when a new trigger pulse is accepted in the trigger -> exposure -> readout sequence.

| Parameter | Trigger Overlap |
|---|---|
| `Off` | The next trigger pulse is only accepted once the previous frame has been read out from the sensor |
| `Readout` | The next trigger pulse is accepted during readout as long as the remaining readout time is shorter than the exposure time |
| USB3 Vision: GenICam | `TriggerOverlap` |
| Type | Enumeration |
| VCD Property | `VCDID_Trigger\VCDElement_TriggerOverlap` |

### 5.4.8 Trigger Delay

The *Trigger Delay* parameter specifies a time for which the camera waits between receiving a trigger signal and starting the exposure of an image. Simulated trigger pulses generated through the *Software Trigger* function are not delayed by this parameter.

| Parameter | Trigger Delay |
|---|---|
| Minimum | 0 s |
| Maximum | 1 s |
| USB3 Vision: GenICam | `TriggerDelay` |
| Type | Float |
| Video4Linux2 | `Trigger Delay` |
| VCD Property | `VCDID_Trigger\VCDElement_TriggerDelay` |

## 5.5 Trigger Timing Parameters

The 33U series camera series offers several options for dealing with bad trigger signals. By using the *Debounce Time*, *Denoise Time* and *Mask Time* parameters, the camera can be configured to ignore pulses on its TRIGGER_IN line under certain conditions.

Useful values for these parameters are application-specific. They depend on the expected trigger frequency, the exposure time and assumptions about the input signal quality.

The default values for all these parameters is 0 µs, assuming perfect signal quality.

### 5.5.1 Trigger Debounce Time

The *Trigger Debounce Time* parameter specifies the time for which the trigger input has to be low in order for the next trigger signal to be accepted.

| Parameter | Trigger Debounce Time |
|---|---|
| Minimum | 0 s |
| Maximum | 1 s |
| Default | 0 s |
| USB3 Vision: GenICam | `TriggerDebouncer` |
| Type | Float |
| Video4Linux2 | `Trigger Debounce Time (us)` |
| VCD Property | `VCDID_Trigger\VCDElement_TriggerDebouncer` |

### 5.5.2 Trigger Mask Time

The *Trigger Mask Time* parameter specifies the time for which trigger pulses are ignored after accepting a trigger signal.

| Parameter | Trigger Mask Time |
|---|---|
| Minimum | 0 s |
| Maximum | 1 s |
| Default | 0 s |
| USB3 Vision: GenICam | `TriggerMask` |
| Type | Float |
| Video4Linux2 | `Trigger Mask Time (us)` |
| VCD Property | `VCDID_Trigger\VCDElement_TriggerMask` |

### 5.5.3 Trigger Noise Suppression Time

The *Trigger Noise Suppression Time* parameter specifies the time for which trigger input has to be active in order to be accepted as a trigger signal.

| Parameter | Trigger Noise Suppression Time |
|---|---|
| Minimum | 0 s |
| Maximum | 1 s |
| Default | 0 s |
| USB3 Vision: GenICam | `TriggerDenoise` |
| Type | Float |
| Video4Linux2 | `Trigger Noise Suppression Time` |
| VCD Property | `VCDID_Trigger\VCDElement_TriggerDenoise` |

## 5.6 Digital I/O

The 33U series has one digital input and one digital output. The digital input can be used as a Trigger input but the current status can also examined directly.

The digital output can be configured as a Strobe output to signal the exact moment when the image sensor is sensitive to light so that external light sources can be synchronized to its operation cycle.

### 5.6.1 General Purpose Input

The *General Purpose Input* parameter allows the current status of the TRIGGER_IN pin.

| Parameter | General Purpose Input |
|---|---|
| `True` | TRIGGER_IN line status is low |
| `1` | |
| `False` | TRIGGER_IN line status is high |
| `0` | |
| USB3 Vision: GenICam | `GPIn` |
| Type | Boolean |
| Video4Linux2 | `GPIN` |
| VCD Property | `VCDID_GPIO\VCDElement_GPIORead`<br>`VCDID_GPIO\VCDElement_GPIOIn` |

### 5.6.2 General Purpose Output

The *General Purpose Output* parameter controls the status of the STROBE_OUT pin.

| Parameter | General Purpose Output |
|---|---|
| `True` | Drive the STROBE_OUT line high |
| `1` | |
| `False` | Drive the STROBE_OUT line low |
| `0` | |
| USB3 Vision: GenICam | `GPOut` |
| Type | Boolean |
| Video4Linux2 | `GPOUT` |
| VCD Property | `VCDID_GPIO\VCDElement_GPIOWrite`<br>`VCDID_GPIO\VCDElement_GPIOOut` |

## 5.7 Strobe

The strobe function controls the automatic generation of output pulses on the STROBE_OUT pin which is synchronized to the image sensor's exposure time.

### 5.7.1 Strobe Enable

The *Strobe Enable* parameter enables the automatic generation of strobe pulses.

| Parameter | Strobe Enable |
|---|---|
| `On` | Strobe enabled |
| `True` | |
| `Off` | Strobe disabled |
| `False` | |
| USB3 Vision: GenICam | `StrobeEnable` |
| Type | Enumeration |
| Video4Linux2 | `Strobe Enable` |
| VCD Property | `VCDID_Strobe\VCDElement_Value` |

### 5.7.2 Strobe Polarity

The *Strobe Polarity* parameter can be used to invert the strobe pulse output.

| Parameter | Strobe Polarity |
|---|---|
| `ActiveHigh` | The STROBE_OUT pin is logically high during the exposure time |
| `True` | |
| `ActiveLow` | The STROBE_OUT pin is logically low during the exposure time |
| `False` | |
| USB3 Vision: GenICam | `StrobePolarity` |
| Type | Enumeration |
| Video4Linux2 | `Strobe Polarity` |
| VCD Property | `VCDID_Strobe\VCDElement_StrobePolarity` |

### 5.7.3 Strobe Operation

The *Strobe Operation* parameter specifies how the length of the strobe pulses are controlled.

| Parameter | Strobe Operation |
|---|---|
| `Exposure` | Output pulse duration is equal to the current exposure time |
| `True` | |
| USB3 Vision: GenICam | `StrobeOperation` |
| Type | Enumeration |
| Video4Linux2 | `Strobe Exposure` |
| VCD Property | `VCDID_Strobe\VCDElement_StrobeMode` |

## 5.8 Image Processing

### 5.8.1 Gamma

The 33U series cameras can perform gamma correction on the image data. If the pixel format of a color camera is set a YUV mode, gamma correction is applied to the Y channel. In bayer raw and RGB24 modes, all color channels are subject to the same gamma correction.

| Parameter | Gamma |
|---|---|
| Minimum | 0.01 |
| Maximum | 5.0 |
| Default | 1.0 |
| USB3 Vision: GenICam | `Gamma` |
| Type | Float |
| Video4Linux2 | `Gamma` |
| VCD Property | `VCDID_Gamma\VCDElement_Value` |

### 5.8.2 Lookup Table

The 33U series allows the user to specify a lookup table (LUT) that can transform pixel values. This lookup table can be used to perform tasks like histogram equalization inside the camera.

If the pixel format of a color camera is set to one of the YUV modes, the lookup table is applied only to the Y channel. In bayer raw and RGB24 modes, all color channels are subject to the same lookup operation.

The lookup table has 257 16-bit entries. The upper 8 bits of the image data are used to select the appropriate entry in the lookup table, while the remaining bits are used to interpolate between the selected entry and one of its neighbors.

The *LUT Enable* feature enables the lookup table.

| Parameter | LUT Enable |
|---|---|
| `True` | Enable lookup table operation |
| `False` | Disable lookup table operation |
| USB3 Vision: GenICam | `LUTEnable` |
| Type | Boolean |

The lookup table values can be programmed using the *LUT Index* and *LUT Value* features.

| Parameter | LUT Index |
|---|---|
| Minimum | 0 |
| Maximum | 256 |
| USB3 Vision: GenICam | `LUTIndex` |
| Type | Integer |

| Parameter | LUT Value |
|---|---|
| Minimum | 0 |
| Maximum | 65535 |
| USB3 Vision: GenICam | `LUTValue` |
| Type | Integer |

The whole lookup table can be quickly reprogrammed through the *LUT Value All* feature.

| Parameter | LUT Value All |
|---|---|
| `Value` | 1028 bytes of memory containing 257 LUT entries. Each 16-bit LUT entry is aligned on a 32-bit boundary |
| USB3 Vision: GenICam | `LUTValueAll` |
| Type | Register |

**Important:** Since gamma correction is implemented using the same hardware as the lookup table, gamma correction is disabled when the lookup table is enabled.

## 5.9 Region of Interest for Auto Functions

The 33U series cameras allow for the setting of a region of interest that is used while controlling the Auto Exposure, Auto Gain and Auto White Balance functions.

### 5.9.1 Auto Functions ROI Enable

The *Auto Functions ROI Enable* parameter allows for the use of a region of interest for auto functions.

| Parameter | Auto Functions ROI Enable |
|---|---|
| `True` | Auto functions only take a specified part of the image into account |
| `False` | Auto functions look at the whole image |
| USB3 Vision: GenICam | `AutoFunctionsROIEnable` |
| Type | Boolean |
| Video4Linux2 | `Auto Functions ROI Enable` |
| VCD Property | `VCDID_AutoRoi\VCDElement_Value` |

### 5.9.2 Auto Functions ROI Preset

The *Auto Functions ROI Preset* parameter lets the user select from a list of ROI presets.

| Parameter | Auto Functions ROI Preset |
|---|---|
| `Full Sensor` | Select the full output image |
| `Center 50%` | Select a rectangular area in the center of the output image |
| `Center 25%` | Select a small rectangular area in the center of the output image |
| `Bottom Half` | Select the bottom half of the output image |
| `Top Half` | Select the top half of the output image |
| `Custom Rectangle` | Select a custom rectangle for fine-grained control |
| USB3 Vision: GenICam | `AutoFunctionsROIPreset` |
| Type | Enumeration |
| Video4Linux2 | `Auto Functions ROI Preset` |
| VCD Property | `VCDID_AutoRoi\VCDElement_AutoRoiPreset` |

### 5.9.3 Auto Functions ROI Custom Rectangle

When *Auto Functions ROI Preset* is set to *Custom Rectangle*, the user can manually set the position and size of the region of interest. The coordinates are relative to the origin of the current video format as specified by Partial Scan Offset.

| Parameter | Auto Functions ROI Left |
|---|---|
| Minimum | 0 |
| Maximum | 2576 |
| Increment | 2 |
| USB3 Vision: GenICam | `AutoFunctionsROILeft` |
| Type | Integer |
| Video4Linux2 | `Auto Functions ROI Left` |
| VCD Property | `VCDID_AutoRoi \VCDElement_AutoRoiLeftRelative` |

| Parameter | Auto Functions ROI Top |
|---|---|
| Minimum | 0 |
| Maximum | 2032 |
| Increment | 2 |
| USB3 Vision: GenICam | `AutoFunctionsROITop` |
| Type | Integer |
| Video4Linux2 | `Auto Functions ROI Top` |
| VCD Property | `VCDID_AutoRoi \VCDElement_AutoRoiTopRelative` |

| Parameter | Auto Functions ROI Width |
|---|---|
| Minimum | 16 |
| Maximum | 2592 |
| Increment | 2 |
| USB3 Vision: GenICam | `AutoFunctionsROIWidth` |
| Type | Integer |
| Video4Linux2 | `Auto Functions ROI Width` |
| VCD Property | `VCDID_AutoRoi \VCDElement_AutoRoiWidthRelative` |

| Parameter | Auto Functions ROI Height |
|---|---|
| Minimum | 16 |
| Maximum | 2048 |
| Increment | 2 |
| USB3 Vision: GenICam | `AutoFunctionsROIHeight` |
| Type | Integer |
| Video4Linux2 | `Auto Functions ROI Height` |
| VCD Property | `VCDID_AutoRoi \VCDElement_AutoRoiHeightRelative` |

## 5.10 User Sets

The 33U series cameras can store their complete configuration into built-in non-volatile memory. The camera configuration can be saved into and restored from one of two

available memory slots upon user's request. Additionally, the camera can be configured to load one of the user's camera configurations at startup.

### 5.10.1 User Set Selector

The *User Set Selector* parameter selects the memory slot on which consecutive load and save commands are executed.

| Parameter | User Set Selector |
|---|---|
| `UserSet1` | First of the two memory slots for user configurations |
| `UserSet2` | Second of the two memory slots for user configurations |
| `Default` | A special memory slot that always contains the camera's factory default configuration. It cannot be overwritten |
| USB3 Vision: GenICam | `UserSetSelector` |
| Type | Enumeration |

### 5.10.2 Load User Set

By using the *Load User Set* command, the user can restore the camera configuration from the memory slot selected by *User Set Selector*.

| Parameter | Load User Set |
|---|---|
| Execute | Restore the camera configuration from the memory slot specified by *User Set Selector* |
| USB3 Vision: GenICam | `UserSetLoad` |
| Type | Command |

### 5.10.3 Save User Set

By using the *Save User Set* command, the user can save the camera configuration into the memory slot selected by *User Set Selector*.

| Parameter | Save User Set |
|---|---|
| Execute | Save the current camera configuration into the memory slot specified by *User Set Selector* |
| USB3 Vision: GenICam | `UserSetSave` |
| Type | Command |

### 5.10.4 Default User Set

The *Default User Set* parameter controls the camera's startup behavior. It selects which memory slot is used for device initialization when the camera is powered up.

| Parameter | Default User Set |
|---|---|
| `UserSet1` | Load configuration from the first memory slot |
| `UserSet2` | Load configuration from the second memory slot |
| `Default` | Load factory default configuration |
| USB3 Vision: GenICam | `UserSetDefault` |
| Type | Enumeration |

## 5.11 Timestamp Control

33U series cameras run an internal timestamp clock. The clock starts at zero when the camera is powered up.

The source of the timestamp clock has a frequency tolerance of ±50 ppm.

All image buffers sent by the camera have a timestamp attached to them.

Notification for asynchronous Events also contain a timestamp value.

### 5.11.1 Timestamp Latch

The *Timestamp Latch* command copies the current value of the camera's timestamp counter into the Timestamp Latch Value so that it can be read later.

| Parameter | Timestamp Latch |
|---|---|
| Execute | Copies the current value of the camera's timestamp into Timestamp Latch Value. |
| USB3 Vision: GenICam | `TimestampLatch` |
| Type | Command |

### 5.11.2 Timestamp Latch Value

The *Timestamp Latch Value* feature contains the value of camera's timestamp counter at the time of the previous execution of the Timestamp Latch command.

| Parameter | Timestamp Latch Value |
|---|---|
| USB3 Vision: GenICam | `TimestampLatchValue` |
| Type | Integer |
| Unit | µs |

### 5.11.3 Timestamp Reset

The *Timestamp Reset* command resets the camera's timestamp counter to start from zero.

| Parameter | Timestamp Reset |
|---|---|
| Execute | Resets the camera's timestamp counter. |
| USB3 Vision: GenICam | `TimestampReset` |
| Type | Command |

## 5.12 Events

33U series devices can send asynchronous event packets, notifying the application about certain events during device operation.

To enable a specific event, select the event to enable in Event Selector and then set Event Notification to *On*.

The way to receive the event notifications depends on the used camera SDK. In most cases, a notification handler has to be registered on the feature named after the event, e.g. *EventTest* or *EventExposureEnd*. Additional event data can often be queried via additional features with a derived name, e.g. *EventTestTimestamp* or *EventExposureEndFrameID*.

### 5.12.1 Event Selector

The *Event Selector* parameter selects an event to configure.

| Parameter | Event Selector |
|---|---|
| `FrameTriggerMissed` | Selects the FrameTriggerMissed event |
| `Line1FallingEdge` | Selects the Line1FallingEdge event |
| `Line1RisingEdge` | Selects the Line1RisingEdge event |
| `Test` | Selects the Test event |
| USB3 Vision: GenICam | `EventSelector` |
| Type | Enumeration |

### 5.12.2 Event Notification

The *Event Notification* parameter enables or disables the event selected by Event Selector.

| Parameter | Event Notification |
|---|---|
| `On` | Enables notifications for the selected event |
| `Off` | Disables notifications for the selected event |
| USB3 Vision: GenICam | `EventNotification` |
| Type | Enumeration |

### 5.12.3 Event Frame Trigger Missed

The *Event Frame Trigger Missed* feature is notified when the camera receives a trigger pulse, but the sensor was not in a state where a new exposure could be started.

The value of this feature has no meaning and should not be read.

| Parameter | Event Frame Trigger Missed |
|---|---|
| USB3 Vision: GenICam | `EventFrameTriggerMissed` |
| Type | Integer |

The *Event Frame Trigger Missed Timestamp* parameter identifies the point in time when the current frame trigger missed event occurred.

Please refer to the documentation of your camera SDK on how to safely read the timestamp associated with the current event when a notification is received.

| Parameter | Event Frame Trigger Missed Timestamp |
|---|---|
| USB3 Vision: GenICam | `EventFrameTriggerMissedTimestamp` |
| Type | Integer |

### 5.12.4 Event Line1 Falling Edge

The *Event Line1 Falling Edge* feature is notified when the input on Line1 changes from high to low.

The value of this feature has no meaning and should not be read.

| Parameter | Event Line1 Falling Edge |
|---|---|
| USB3 Vision: GenICam | `EventLine1FallingEdge` |
| Type | Integer |

The *Event Line1 Falling Edge Timestamp* parameter identifies the point in time when the current line1 falling edge event occurred.

Please refer to the documentation of your camera SDK on how to safely read the timestamp associated with the current event when a notification is received.

| Parameter | Event Line1 Falling Edge Timestamp |
|---|---|
| USB3 Vision: GenICam | `EventLine1FallingEdgeTimestamp` |
| Type | Integer |

### 5.12.5 Event Line1 Rising Edge

The *Event Line1 Rising Edge* feature is notified when the input on Line1 changes from high to low.

The value of this feature has no meaning and should not be read.

| Parameter | Event Line1 Rising Edge |
|---|---|
| USB3 Vision: GenICam | `EventLine1RisingEdge` |
| Type | Integer |

The *Event Line1 Rising Edge Timestamp* parameter identifies the point in time when the current line1 rising edge event occurred.

Please refer to the documentation of your camera SDK on how to safely read the timestamp associated with the current event when a notification is received.

| Parameter | Event Line1 Rising Edge Timestamp |
|---|---|
| USB3 Vision: GenICam | `EventLine1RisingEdgeTimestamp` |
| Type | Integer |

### 5.12.6 Event Test

The *Event Test* feature is notified when a test event occurs.

To generate a test event, use the *Test Event Generate* command.

The value of this feature has no meaning and should not be read.

| Parameter | Event Test |
|---|---|
| USB3 Vision: GenICam | `EventTest` |
| Type | Integer |

The *Event Test Timestamp* parameter identifies the point in time when the current test event occurred.

Please refer to the documentation of your camera SDK on how to safely read the timestamp associated with the current event when a notification is received.

| Parameter | Event Test Timestamp |
|---|---|
| USB3 Vision: GenICam | `EventTestTimestamp` |
| Type | Integer |

The *Test Event Generate* command can be used to generate a test event.

| Parameter | Test Event Generate |
|---|---|
| Execute | Generate one test event |
| USB3 Vision: GenICam | `TestEventGenerate` |
| Type | Command |

## 5.13 Bandwidth Control

When using multiple 33U series devices connected to the same host controller, the data rate has to be considered to allow consistent operation.

To limit the bandwith of a camera, set Device Link Throughput Limit Mode to `On`, and set Device Link Throughput Limit to the desired maximum data rate.

### 5.13.1 Device Link Throughput Limit Mode

The *Device Link Throughput Limit Mode* parameter enables or disables the effect of Device Link Throughput Limit.

If set, the camera's internal frame rate is automatically reduced to fit into the available bandwith.

| Parameter | Device Link Throughput Limit Mode |
|---|---|
| `Off` | The bandwith the device uses for streaming is unlimited. |
| `On` | The maximum bandwidth the device uses for streaming is defined by Device Link Throughput Limit. |
| USB3 Vision: GenICam | `DeviceLinkThroughputLimitMode` |
| Type | Enumeration |

### 5.13.2 Device Link Throughput Limit

The *Device Link Throughput Limit* parameter defines the maximum bandwidth used by the device to stream data.

Device Link Throughput Limit Mode must be set to `On` for *Device Link Throughput Limit* to have an effect.

| Parameter | Device Link Throughput Limit |
|---|---|
| Minimum | 1000000 Mbps |
| Maximum | 400000000 Mbps |
| USB3 Vision: GenICam | `DeviceLinkThroughputLimit` |
| Type | Integer |

# 6 Revision History

| Date | Version | Description |
|---|---|---|
| 2018/04/19 | | Initial release of this document |
| 2023/07/19 | | Updated environmental section in quick facts chapter. |
| 2024/01/09 | Firmware 1554 | Add EventFrameTriggerMissed, EventLine1RisingEdge, EventLine1FallingEdge features |
| 2024/11/13 | Firmware 1732 | Add DeviceLinkThroughputLimit feature |

# DMK 33UJ003 Technical Reference Manual

All product and company names in this document may be trademarks and tradenames of their respective owners and are hereby acknowledged.

The Imaging Source Europe GmbH cannot and does not take any responsibility or liability for any information contained in this document. The source code presented in this document is exclusively used for didactic purposes. The Imaging Source does not assume any kind of warranty expressed or implied, resulting from the use of the content of this document or the source code.

The Imaging Source Company reserves the right to make changes in specifications, function or design at any time and without prior notice.

Last update: April 2025
© 2025 The Imaging Source
All rights reserved. Reprint, also in parts, only allowed with permission of The Imaging Source Europe GmbH.

All weights and dimensions are approximate. Unless otherwise specified, the lenses shown in the context of cameras are not shipped with these cameras.

**Headquarters:**

*The Imaging Source Europe GmbH*
*Überseetor 18, D-28217 Bremen, Germany*
*Phone: +49 421 33591-0*

**North & South America:**

*The Imaging Source, LLC*
*4600 Park Road, Suite 470, Charlotte, NC 28209, United States*
*Phone: +1 877-462-4772*

**Asia Pacific:**

*The Imaging Source Asia Co., Ltd.*
*3F., No. 43-7/8, Zhongxing Road*
*Xizhi District, New Taipei City 221012, Taiwan*
*Phone: +886 2-2792-3153*

**www.theimagingsource.com**