Technical Details

DMK 36CX568-I67
Technical Reference Manual

THE IMAGINGSOURCE
TECHNOLOGY BASED ON STANDARDS

Table of Contents

1. Quick Facts 3

2. Electrical Characteristics 5

2.1 Absolute Maximum Ratings 5

2.2 Recommended Operating Conditions 5

3. Dimensional Diagrams 6

3.1 DMK 36CX568-I67 without Tripod Adapter 6

3.2 DMK 36CX568-I67 with Tripod Adapter 7

4. Spectral Characteristics 8

4.1 Spectral Sensitivity - IMX568-AAMJ-C 8

5. FPD-Link Serializer I/O Signals 9

6. I2C I/O Expander Configuration 10

7. I2C Devices 11

8. Status LEDs 12

9. Trigger Control FPGA 13

1 Quick Facts

General	
Dynamic Range	10 bit
Resolution	2448x2048
Frame Rate at Full Resolution	48
Pixel Formats	10-Bit Monochrome

Optical Interface	
Sensor Type	Sony IMX568-AAMJ-C
Shutter Type	Global
Sensor Format	1/1.8 inch
Pixel Size	2.74 µm

Electrical Interface	
Interface	FPD-Link III via FAKRA connector
Supply voltage	10-27V
Current consumption	approx tbd mA @ 18 VDC

Mechanical Data	
Dimensions	H: 36 mm, W: 36 mm, L: 60.3 mm
Mass	80 g
Protection Class	IP6K6, IP6K7 (ISO 20653) *

*) Protection only while The Imaging Source IP67 FAKRA cable is connected to the camera.

Adjustments	
Shutter	15 µs to 1 s
Gain	0 dB to 48 dB

Environmental	
Temperature (operating)	-5 °C to 45 °C
Temperature (storage)	-20 °C to 60 °C
Humidity (operating)	20 % to 80 % (non-condensing)
Humidity (storage)	20 % to 95 % (non-condensing)

2 Electrical Characteristics

2.1 Absolute Maximum Ratings

Item	Symbol	Pins	Min	Max	Unit
Supply voltage	V_COAX		-0.3	+27.0	V

2.2 Recommended Operating Conditions

Item	Symbol	Pins	Min	Typ	Max	Unit
Supply voltage	V_COAX		9.0	18.0	24.0	V

3 Dimensional Diagrams

3.1 DMK 36CX568-I67 without Tripod Adapter

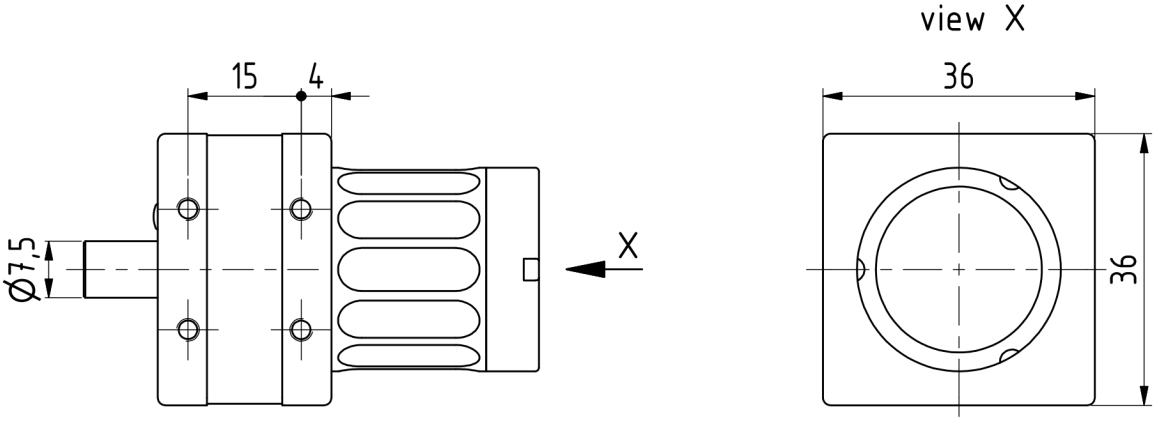

*) available in different lengths

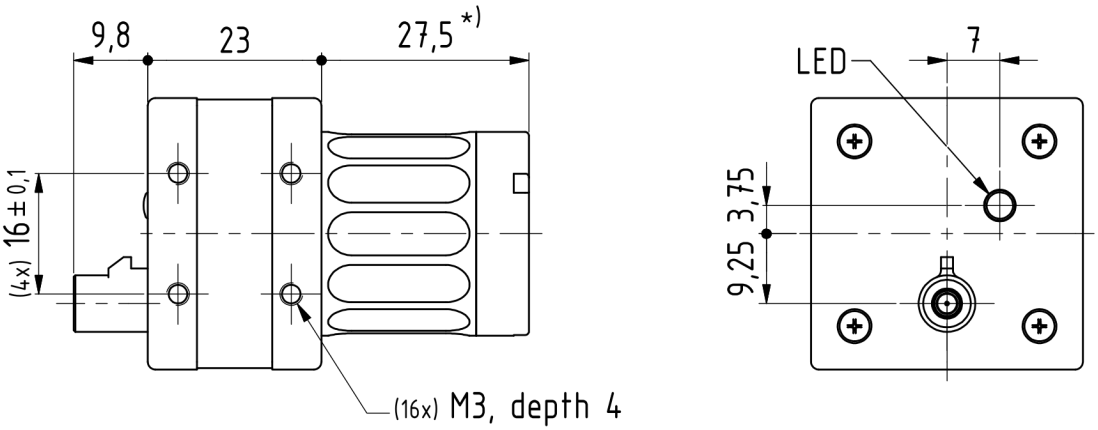

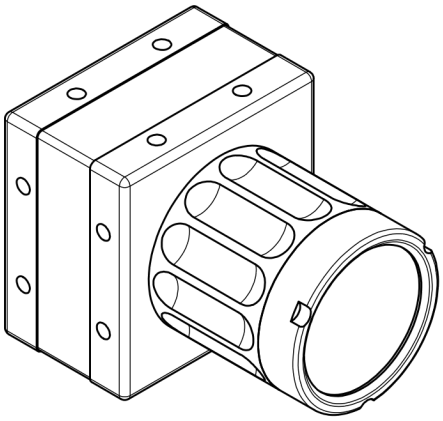

Scale: 1 : 1
Dimensions: mm
Tolerances: DIN ISO 2768-m

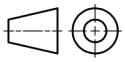

275-20-1-01-00-c (w/o tripod-adapter)

3.2 DMK 36CX568-I67 with Tripod Adapter

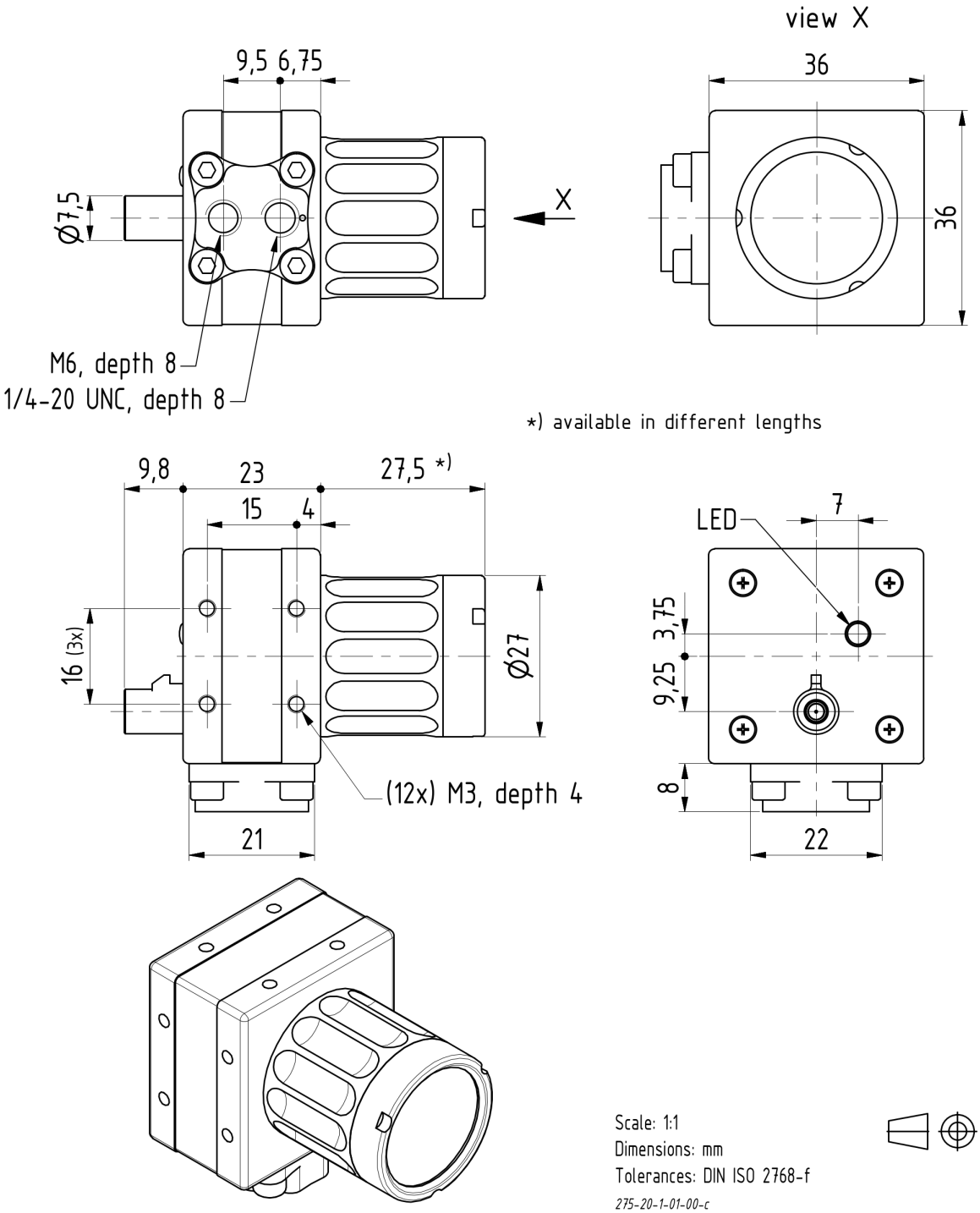

4 Spectral Characteristics

4.1 Spectral Sensitivity - IMX568-AAMJ-C

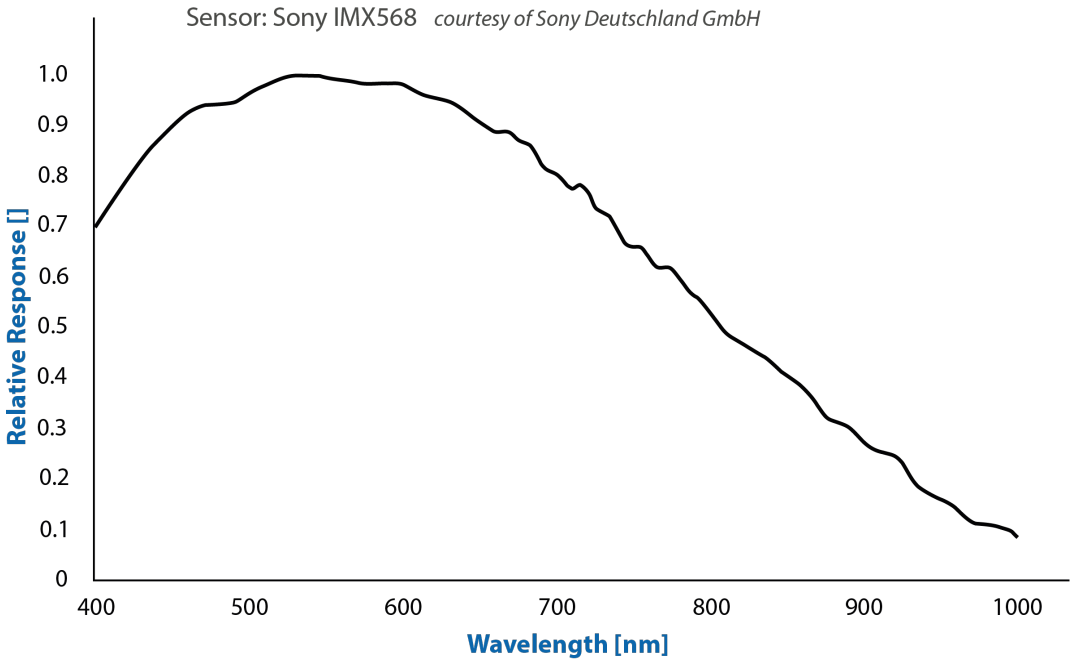

5 FPD-Link Serializer I/O Signals

The serializer chip DS90UB953-Q1 (Texas Instruments) has 4 GPIO pins. Their purpose is described in the following table:

Pin	Name	Dir	Description
17 (GPIO0)	STROBE	I	Strobe signal from CMOS sensor
18 (GPIO1)	NC	-	Not connected
27 (GPOI2)	TRIGGER	O	Trigger signal to the CMOS sensor
28 (GPOI3)	RESERVED1_GPIO3	I/O	Reserved signal

The serializer's CLK_OUT (19) pin is connected to the sensor's clock input. This means that the sensor's clock frequency is controlled through serializer PLL registers.

6 I2C I/O Expander Configuration

Various I/O functionalities of the camera are controlled through a I2C I/O Expander.

The TCA6408A part has the 7-bit I2C-address 0x20. The table below depicts which signals can be controlled through this expander:

I/O Pin	Name	Dir	Description
P0	CAM_PWR	O	Enable CMOS sensor power supply 0: Sensor power disabled 1: Sensor power enabled
P1	RESET	O	CMOS sensor reset signal 0: Sensor is in reset state 1: Sensor is in operational state
P2	GPOUT_LEVEL	O	If GPOUT_SELECT = 0: --->0: LED1 off --->1: LED1 on
P4	GPOUT_SELECT	O	0: Control LED via GPOUT_LEVEL 1: Reserved
P5	RESERVED_5	O	Reserved
P6	RESERVED_6	O	Reserved
P7	RESERVED_7	O	Reserved

7 I2C Devices

There are multiple I2C devices on the DMK 36CX568-I67 sensor board. The following table describes the parts and their I2C addresses:

Address (7-bit)	Device	Description
0x1A	IMX568-AAMJ-C	Image Sensor
0x20	TCA6408A	I/O Expander
0x40	LCMXO3L-1300E	Trigger Control FPGA (configuration)
0x42	LCMXO3L-1300E	Trigger Control FPGA (control)
0x50	AT24C256C	EEPROM
0x57	AT24C02C	EEPROM

8 Status LEDs

There is one status LED on the serializer board:

Name	Color	Description
LED1	Green	Controlled through GPOUT_LEVEL on the I/O expander

9 Trigger Control FPGA

In order to handle complex trigger/strobe functions of the image sensor, a FPGA is present the on sensor board.

A reference driver implementation is available upon request.

DMK 36CX568-I67

All product and company names in this document may be trademarks and tradenames of their respective owners and are hereby acknowledged.

The Imaging Source Europe GmbH cannot and does not take any responsibility or liability for any information contained in this document. The source code presented in this document is exclusively used for didactic purposes. The Imaging Source does not assume any kind of warranty expressed or implied, resulting from the use of the content of this document or the source code.

The Imaging Source Company reserves the right to make changes in specifications, function or design at any time and without prior notice.

Last update: July 2026
© 2026 The Imaging Source Europe GmbH
All rights reserved. Reprint, also in parts, only allowed with permission of The Imaging Source Europe GmbH.

All weights and dimensions are approximate. Unless otherwise specified, the lenses shown in the context of cameras are not shipped with these cameras.

Headquarters:

The Imaging Source Europe GmbH
Überseetor 18, D-28217 Bremen, Germany
Phone: +49 421 33591-0

North & South America:

The Imaging Source, LLC
Suite 470, 4600 Park Road, Charlotte, NC 28209, United States
Phone: +1 877-462-4772

Asia Pacific:

The Imaging Source Asia Co., Ltd.
3F., No. 43-7/8, Zhongxing Road
Xizhi District, New Taipei City 221012, Taiwan
Phone: +886 2-2792-3153

www.theimagingsource.com