Technical Details

DMK 39GX548-Z20
Technical Reference Manual

THE IMAGINGSOURCE
TECHNOLOGY BASED ON STANDARDS

Table of Contents

1. Quick Facts 5

2. Dimensional Diagrams 7

2.1 DMK 39GX548-Z20 Zoom Camera with Tripod Adapter ... 7

2.2 DMK 39GX548-Z20 Zoom Camera without Tripod Adapter ... 8

3. I/O Connector 9

3.1 6-pin I/O Connector ... 9

3.1.1 TRIGGER_IN ... 9

3.1.2 STROBE_OUT ... 10

4. Spectral Characteristics 11

4.1 Spectral Sensitivity - IMX548-AAMJ-C ... 11

5. Camera Controls 12

5.1 Sensor Readout Control ... 12

5.1.1 Pixel Format ... 12

5.1.1.1 8-Bit Monochrome ... 12

5.1.1.2 12-Bit Packed Monochrome ... 13

5.1.1.3 16-Bit Monochrome ... 13

5.1.2 Resolution ... 13

5.1.3 Readout Modes ... 14

5.1.4 Frame Rate ... 15

5.1.5 Partial Scan Offset ... 16

5.1.6 Image Flipping ... 18

5.2 Image Sensor Control ... 18

5.2.1 Exposure Time ... 18

5.2.2 Gain ... 18

5.2.3 Black Level ... 19

5.3 Automatic Exposure and Gain Control ... 19

5.3.1 Auto Exposure ... 20

5.3.2 Auto Gain ... 20

5.3.3 Auto Reference Value ... 20

5.3.4 Highlight Reduction ... 21

5.3.5 Auto Exposure Limits ... 21

5.3.6 Auto Gain Limits ... 22

5.4 Lens Control ... 22

5.4.1 Zoom ... 22

5.4.2 Focus ... 23

5.4.3 Iris ... 23

5.4.4 Infrared Cut Filter ... 24

5.4.5 Auto Focus ... 24

5.4.6 Auto Focus ROI ... 25

5.4.7 Auto Iris ... 26

5.5 Trigger 27
5.5.1 Trigger Mode 27
5.5.2 Trigger Polarity 27
5.5.3 Software Trigger 27
5.5.4 Trigger Burst Count 28
5.5.5 Trigger Source 28
5.5.6 IMX Low-Latency Mode 28
5.5.7 Trigger Overlap 29
5.5.8 Trigger Delay 29
5.6 Trigger Timing Parameters 30
5.6.1 Trigger Debounce Time 30
5.6.2 Trigger Mask Time 30
5.6.3 Trigger Noise Suppression Time 31
5.7 Digital I/O 31
5.7.1 General Purpose Input 31
5.7.2 General Purpose Output 32
5.8 Strobe 32
5.8.1 Strobe Enable 32
5.8.2 Strobe Polarity 33
5.8.3 Strobe Operation 33
5.8.4 Strobe Duration 34
5.8.5 Strobe Delay 34
5.9 Image Processing 34
5.9.1 Gamma 34
5.9.2 Lookup Table 35
5.10 Region of Interest for Auto Functions 36
5.10.1 Auto Functions ROI Enable 36
5.10.2 Auto Functions ROI Preset 36
5.10.3 Auto Functions ROI Custom Rectangle 37
5.11 User Sets 38
5.11.1 User Set Selector 38
5.11.2 Load User Set 39
5.11.3 Save User Set 39
5.11.4 Default User Set 39
5.12 Multi-Frame Output Mode 39
5.12.1 Multi-Frame Output Mode Enable 40
5.12.2 Multi-Frame Output Mode Frame Count 40
5.12.3 Multi-Frame Output Mode Exposure Time 40
5.12.4 Multi-Frame Output Mode Custom Gain 41
5.12.5 Multi-Frame Output Mode Gain 41
5.13 Precision Time Protocol 42
5.13.1 PTP Enable 42
5.13.2 PTP Status 42

5.14 Action Scheduler 43
5.14.1 Action Selector 43
5.14.2 Action Scheduler Time 43
5.14.3 Action Scheduler Interval 44
5.14.4 Action Scheduler Commit 44
5.14.5 Action Scheduler Cancel 44
5.15 Events 45
5.15.1 Event Selector 45
5.15.2 Event Notification 45
5.15.3 Event Exposure End 46
5.15.4 Event Frame Trigger Missed 47
5.15.5 Event Line1 Falling Edge 47
5.15.6 Event Line1 Rising Edge 48
5.15.7 Event Focus Move Completed 48
5.15.8 Event Zoom Move Completed 49
5.15.9 Event Test 49
5.16 Chunk Data 50
5.16.1 Chunk Mode Active 50
5.16.2 Chunk Selector 51
5.16.3 Chunk Enable 51
5.16.4 Chunk Exposure Time 51
5.16.5 Chunk Gain 52
5.17 Bandwidth Control 52
5.17.1 Device Link Throughput Limit Mode 52
5.17.2 Device Link Throughput Limit 53

6. Zoom Lens Information 54
6.1 Minimum Object Distance 54
6.2 Zoom Factor 55

7. Status LEDs 56
7.1 LEDs on the RJ45 Connector 56
7.2 RGB Status LED 56

8. Revision History 57

1 Quick Facts

General	
Vision Standard	GigE Vision
Dynamic Range	12 bit
Resolution	2448x2048
Frame Rate at Full Resolution	24
Pixel Formats	8-Bit Monochrome 12-Bit Packed Monochrome 16-Bit Monochrome

Optical Interface	
IR-Cut filter	Yes (removable)
Sensor Type	Sony IMX548-AAMJ-C
Shutter Type	Global
Sensor Format	1/1.8 inch
Pixel Size	2.74 µm

Integrated Lens	
Focal Length	6.8 mm (wide) to 136 mm (tele)
Minimal Object Distance	1 cm (wide) to 90 cm (tele)
Iris	F1.5 (wide) to F3.4 (tele)

Electrical Interface	
Interface	GigE
Supply Voltage	9 VDC to 27 VDC or PoE: 48 VDC to 56 VDC
Current Consumption (DC)	approx 400 mA @ 12 VDC
I/O Connector	6-pin connector for power supply, trigger and strobe or general purpose input/output

Mechanical Data	
Dimensions	H: 71 mm, W: 71 mm, L: 147 mm
Mass	691 g

Adjustments	
Shutter	2 µs to 30 s
Gain	0 dB to 48 dB

Environmental Conditions	
Housing Temperature (operating)	-5 °C to 45 °C
Temperature (storage)	-20 °C to 60 °C
Humidity (operating)	20 % to 80 % (non-condensing)
Humidity (storage)	20 % to 95 % (non-condensing)

2 Dimensional Diagrams

2.1 DMK 39GX548-Z20 Zoom Camera with Tripod Adapter

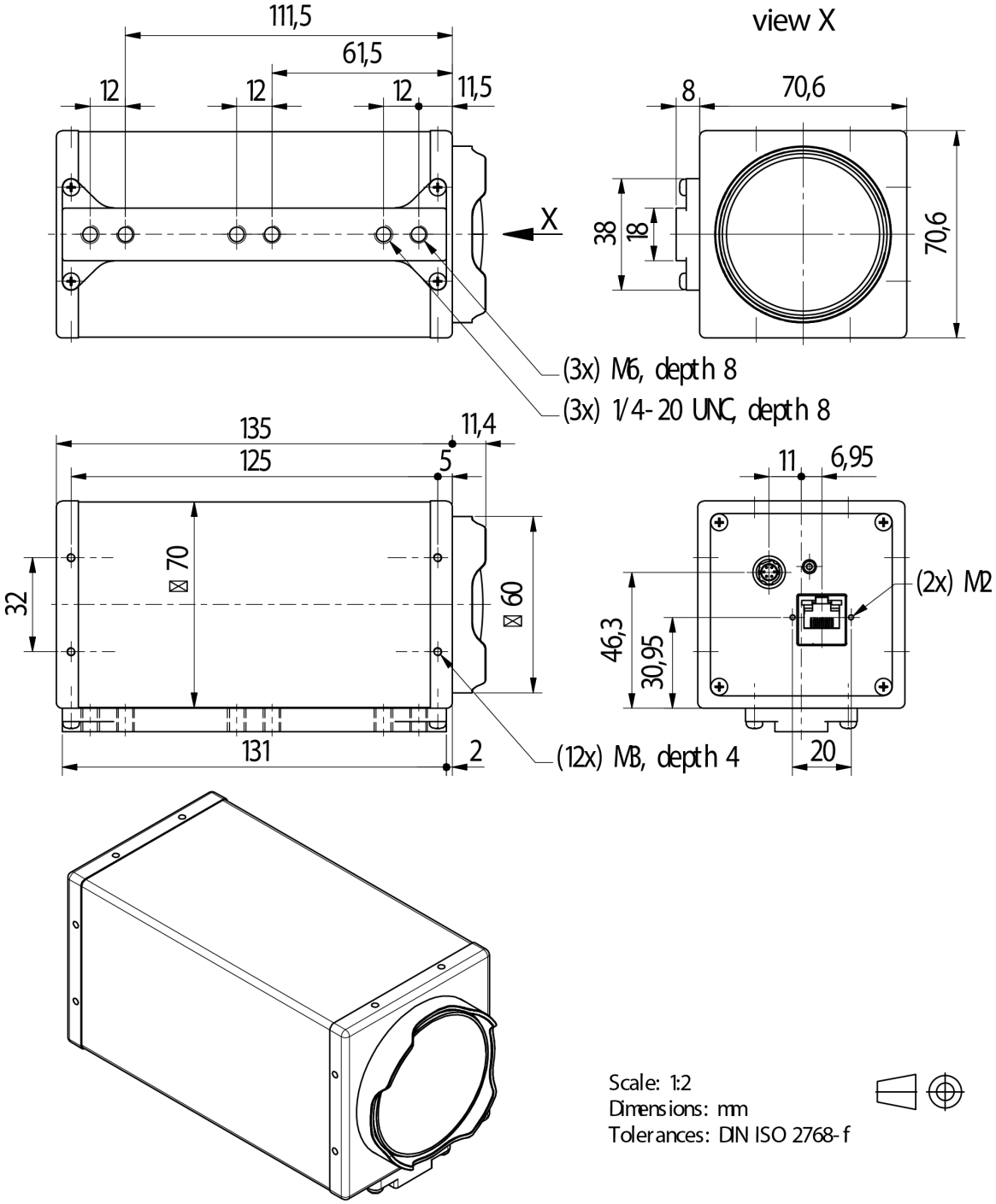

2.2 DMK 39GX548-Z20 Zoom Camera without Tripod Adapter

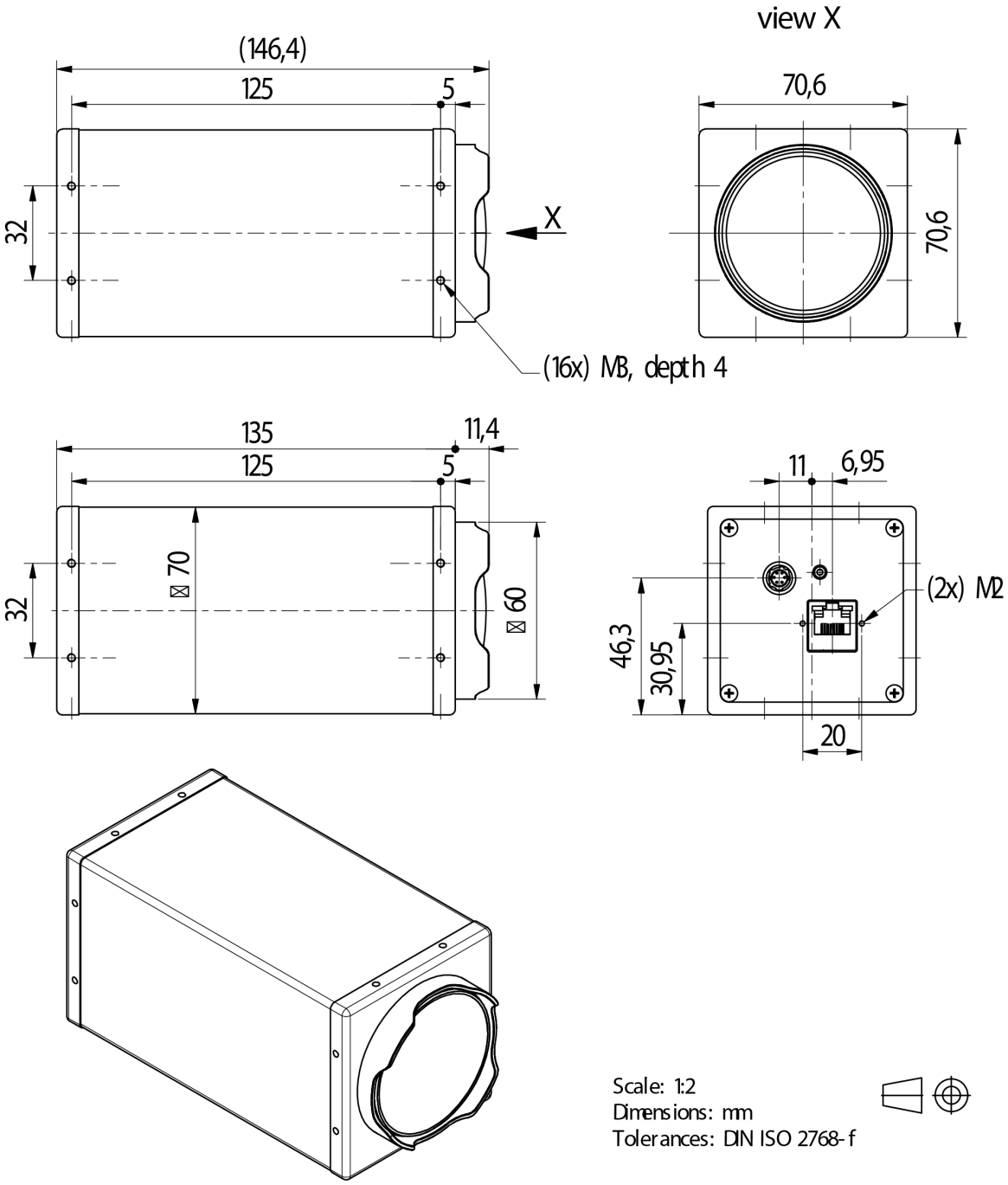

3 I/O Connector

3.1 6-pin I/O Connector

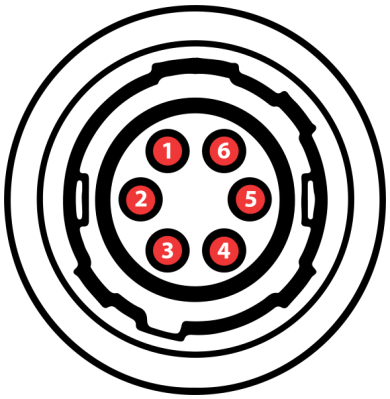

Rear view of camera

Pin	Signal	I/O	Remarks	Characteristics			
				Min	Typ	Max	Unit
1	GigE Power Supply	P[3]		9.0	12.0	27.0	V
2	TRIGGER_IN (+)	I[3]	Optocoupler signal	3.3[2]	-	24.0[2]	V
3	TRIGGER_IN (-)	I[3]	Optocoupler ground	-	-	-	-
4	STROBE_OUT	O[3]	Open drain	-	-	24.0[1]	V
5	GND_I/O	G[3]	External Ground (Open Drain)	-	-	-	-
6	GND_DC	G[3]	External Ground (Power Supply)	-	-	-	-

[1] max. 0.2A (ID) for open drain MOSFET!

[2] min. 3.5 mA driver strength required!

[3] G: Ground O: Output I: Input

The part number of this Hirose connector is HR10A-7R-6P(73). To create an I/O cable you need a Hirose connector HR10A-7P-6S(73).

3.1.1 TRIGGER_IN

The *TRIGGER_IN* line can be used to synchronize the start of the exposure time with external events. The Trigger section describes in detail how the image sensor's behavior can be controlled.

The current input signal can also be read directly through the General Purpose Input feature.

3.1.2 STROBE_OUT

The *STROBE_OUT* line's main usage is to indicate the integration time of the image sensor which allows flashes, strobes or other light sources to be synchronized with camera operation. The line's behavior can be controlled through the Strobe controls.

The output signal can also be directly controlled through the General Purpose Output feature.

4 Spectral Characteristics

4.1 Spectral Sensitivity - IMX548-AAMJ-C

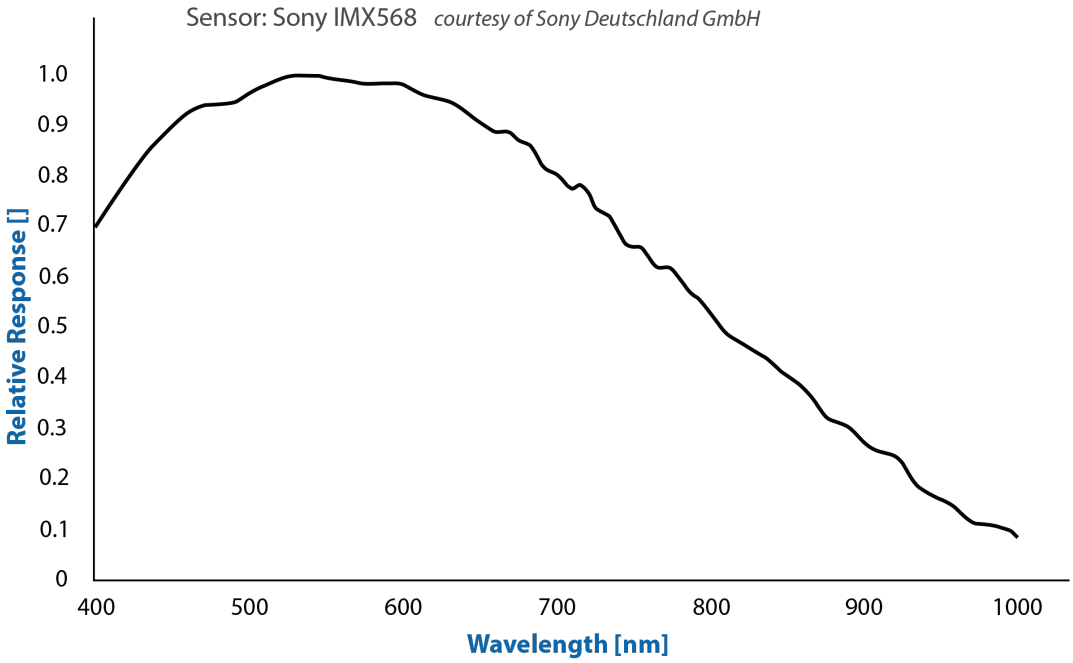

5 Camera Controls

This section describes the parameters available for the DMK 39GX548-Z20 camera.

The actual name of the parameter depends on the driver technology used to access the camera. Parameter names are listed for the most common ways to access the cameras:

- *GigE Vision* (*IC Imaging Control 4*, or via 3rd party driver)
- *IC Imaging Control 3.x* (on Windows, via *Device Driver for The Imaging Source GigE Cameras*)

5.1 Sensor Readout Control

5.1.1 Pixel Format

The pixel format defines the data type of the pixels transmitted to the computer. The bits per pixel needed for a particular pixel format influence the required bandwith.

The way the pixel format is controlled varies significantly among the driver technology used to access the camera:

- When using *IC Imaging Control 4* or *GigE Vision*, the pixel format is controlled through the `PixelFormat` GenICam feature.
- When using *IC Imaging Control 3.x*, the pixel format is part of the video format - a parameter which combines pixel format, resolution and readout mode. For more information, refer to the *IC Imaging Control 3.x* documentation sections on `VideoFormat` and `VideoFormatDesc`.

The DMK 39GX548-Z20 monochrome camera supports multiple pixel formats with variable bits-per-pixel settings. The names of the pixel formats and the way to select them depends on the driver used to control the camera. The following table contains a short overview of all possible formats followed by a more detailed description.

Pixel Format	Bits Per Pixel	GigE Vision	TIS GigE Driver
8-Bit Monochrome	8	`Mono8`	`Y800`
12-Bit Packed Monochrome	12	`Mono12Packed`	`Y16`
16-Bit Packed Monochrome	16	`Mono16`	`Y16`

5.1.1.1 8-Bit Monochrome

This format transmits data using one byte for each pixel.

GigE Vision drivers see this pixel format as `Mono8`.

The *Device Driver for The Imaging Source GigE Cameras* offers this pixel format as the `Y800` video format.

5.1.1.2 12-Bit Packed Monochrome

This format transmits data using 3 bytes for each pair of 2 consecutive pixels.

GigE Vision drivers see this pixel format as `Mono12Packed`.

The *Device Driver for The Imaging Source GigE Cameras* offers this pixel format as the `Y16` video format. Since the DMK 39GX548-Z20 camera offers both 12-bit packed and 16-bit monochrome pixel formats, the driver will use the 12-bit packed format when the `Y16` video format is selected.

5.1.1.3 16-Bit Monochrome

The sensor of the DMK 39GX548-Z20 camera is not capable of providing 16-bit data output. Instead, the pixel data is transmitted in the most significant bits which allows application programs to ignore the sensor-specific data type, and treat the data as if the sensor outputs 16 bits.

GigE Vision drivers see this pixel format as `Mono16`.

The *Device Driver for The Imaging Source GigE Cameras* offers this pixel format as the `Y16` video format.

5.1.2 Resolution

The DMK 39GX548-Z20 allows the user to specify which rectangular region of the image sensor to read out during camera operation. The size of this rectangle determines the number of pixels that have to be transferred for each frame and has a significant influence on the required network bandwidth.

Lowering the resolution also often allows the image sensor to operate at a higher frame rate. Changes in the vertical resolution have more effect on the maximum frame rate than changes in the horizontal direction.

The way the resolution is controlled varies greatly between the driver technology used to access the camera:

- When using *GigE Vision*, the resolution is controlled through the GenICam features Width and Height.
- When using *IC Imaging Control*, the resolution is part of the video format, a parameter that combines pixel format, resolution and readout mode. For more information, refer to the *IC Imaging Control* documentation sections on `VideoFormat` and `VideoFormatDesc`.

Parameter	Horizontal Resolution
Minimum	608
Maximum	2448
Increment	8
GigE Vision: GenICam	`Width`
Type	Integer

Parameter	Vertical Resolution
Minimum	8
Maximum	2048
Increment	8
GigE Vision: GenICam	`Height`
Type	Integer

5.1.3 Readout Modes

The DMK 39GX548-Z20 camera offers different sensor readout modes.

By default, the camera outputs all pixels of the image sensor.

In *skipping* modes, the image sensor regularly skips a number of rows and/or columns during readout. The resulting output image is smaller but contains the same field of view than the image produced by default readout mode.

In *binning* modes, a number of neighboring pixels is merged into one output pixel during readout. The nature of this merge operation is sensor-specific, most sensors either add the pixel values or average them.

Generally, binning modes provide better image quality than skipping modes. However, skipping modes usually provide a higher maximum frame rate.

The way the readout modes are controlled depends greatly upon which driver technology is used to access the camera:

- When using *GigE Vision*, the readout mode is controlled through the *GenICam* features `DecimationHorizontal`, `DecimationVertical`, `BinningHorizontal` and `BinningVertical`.
- When using *IC Imaging Control*, the readout mode is part of the video format - a parameter that which combines pixel format, resolution and readout mode. For more information, refer to the *IC Imaging Control* documentation sections on `VideoFormat` and `VideoFormatDesc`.

The following readout modes are supported:

- Default

- Skipping 2X
- Binning 2X

Parameter	Binning Horizontal
Valid Values	1, 2
GigE Vision: GenICam	`BinningHorizontal`
Type	Integer

Parameter	Binning Vertical
Valid Values	1, 2
GigE Vision: GenICam	`BinningVertical`
Type	Integer

Parameter	Skipping Horizontal
Valid Values	1, 2
GigE Vision: GenICam	`DecimationHorizontal`
Type	Integer

Parameter	Skipping Vertical
Valid Values	1, 2
GigE Vision: GenICam	`DecimationVertical`
Type	Integer

5.1.4 Frame Rate

The frame rate is specified in frames per second and determines the camera's operating speed.

The way the frame rate is controlled depends greatly upon which driver technology is used to access the camera:

- When using *GigEVision*, the frame rate is controlled through the *GenICam* feature `AcquisitionFrameRate`.
- When using IC Imaging Control, the frame rate is selected from a list of available frame rates through APIs such as `Grabber::setFPS` or `ICImagingControl.DeviceFrameRate`.

The range of available frame rates depends upon other camera settings such as well, pixel format, resolution and readout modes.

Parameter	Frame Rate
Minimum	Depending on Pixel Format, Resolution, and Readout Mode
Maximum	Depending on Pixel Format, Resolution, and Readout Mode
GigE Vision: GenICam	`AcquisitionFrameRate`
Type	Float

Please note: Enabling Device Link Throughput Limit Mode can limit the frame rate below the configured value.

The following tables show the maximum frame rate for some combinations of pixel format and resolution.

8-Bit Monochrome

Width	Height	Maximum Frame Rate
2448	2048	24
1920	1080	57
640	480	114

12-Bit Packed Monochrome

Width	Height	Maximum Frame Rate
2448	2048	16
1920	1080	38
640	480	114

16-Bit Monochrome

Width	Height	Maximum Frame Rate
2448	2048	12
1920	1080	29
640	480	114

5.1.5 Partial Scan Offset

If the selected resolution is smaller than the sensor size, the part of the sensor that is actually read out can be specified by the *Partial Scan Offset X* and *Partial Scan Offset Y*

parameters. By default, the camera automatically positions the offsets so that the center of the sensor is used.

Parameter	Partial Scan Offset X
Minimum	0
Maximum	1840
Increment	8
GigE Vision: GenICam	`OffsetX`
Type	Integer
VCD Property	`VCDID_PartialScanOffset` `\VCDElement_PartialScanOffsetX`

Parameter	Partial Scan Offset Y
Minimum	0
Maximum	2040
Increment	8
GigE Vision: GenICam	`OffsetY`
Type	Integer
VCD Property	`VCDID_PartialScanOffset` `\VCDElement_PartialScanOffsetY`

If *Partial Scan Offset X* or *Partial Scan Offset Y* is configured to a value that would be invalid with the current setting of Resolution setting, the camera uses the maximum possible value.

Parameter	Partial Scan Auto Center
`On`	Automatically configure Partial Scan Offset X/Y so that the center area of the sensor is read out
`True`	
`Off`	Control Partial Scan Offset X/Y manually
`False`	
GigE Vision: GenICam	`OffsetAutoCenter`
Type	Boolean
VCD Property	`VCDID_PartialScanOffset` `\VCDElement_PartialScanAutoCenter`

5.1.6 Image Flipping

The DMK 39GX548-Z20 camera allows flipping of the image data horizontally, vertically, or both. The *Flip Horizontal* and *Flip Vertical* parameters can be used to control this sensor feature.

Parameter	Flip Horizontal
`True`	Image data is flipped horizontally
`False`	Image data is not flipped horizontally
GigE Vision: GenICam	`ReverseX`
Type	Boolean
VCD Property	`VCDID_FlipHorizontal\VCDElement_Value`

Parameter	Flip Vertical
`True`	Image data is flipped vertically
`False`	Image data is not flipped vertically
GigE Vision: GenICam	`ReverseY`
Type	Boolean
VCD Property	`VCDID_FlipVertical\VCDElement_Value`

5.2 Image Sensor Control

5.2.1 Exposure Time

The *Exposure Time* parameter defines the time the camera opens its (electronic) shutter when it is taking an image.

Parameter	Exposure Time
Minimum	2 µs
Maximum	30 s
Default	auto
GigE Vision: GenICam	`ExposureTime`
Type	Float
VCD Property	`VCDID_Exposure\VCDElement_Value`

5.2.2 Gain

The *Gain* parameter defines the amplification that is applied to the image at sensor level.

Parameter	Gain
Minimum	0 dB
Maximum	48 dB
Default	auto
GigE Vision: GenICam	`Gain`
Type	Float
VCD Property	`VCDID_Gain\VCDElement_Value`

5.2.3 Black Level

The *Black Level* parameter defines the lowest possibly intensity value of the image sensor.

Parameter	Black Level
Minimum	0
Maximum	4095
Default	240
GigE Vision: GenICam	`BlackLevel`
Type	Float
VCD Property	`VCDID_Brightness\VCDElement_Value`

5.3 Automatic Exposure and Gain Control

The DMK 39GX548-Z20 camera can automatically control gain and exposure time. These automatic functions are enabled by default.

In order to optimize image parameters, a region of interest can be specified for automatic functions. Specifying a region of interest enables fine-grained control over the image area for which the image parameters are optimized. A selection of pre-defined area presets is available, but the user can also specify the coordinates of a custom rectangle.

In certain situations, it is desirable to limit the range of the auto-controlled parameters. For example, one might want to avoid high gain settings in order to keep noise levels low. Other applications require limiting the maximum exposure time so that movements do not get blurred. Therefore, the ranges of the gain and exposure parameter can be limited.

If both auto exposure and auto gain are active, the camera tries to lower the gain value in order to reduce noise and improve the image quality.

5.3.1 Auto Exposure

Parameter	Auto Exposure
`Continuous`	Enable Auto Exposure
`True`	
`Off`	Disable Auto Exposure
`False`	
GigE Vision: GenICam	`ExposureAuto`
Type	Enumeration
VCD Property	`VCDID_Exposure\VCDElement_Auto`

5.3.2 Auto Gain

Parameter	Auto Gain
`Continuous`	Enable Auto Gain
`True`	
`Off`	Disable Auto Gain
`False`	
GigE Vision: GenICam	`GainAuto`
Type	Enumeration
VCD Property	`VCDID_Gain\VCDElement_Auto`

5.3.3 Auto Reference Value

The *Auto Reference Value* parameter specifies the target brightness for both auto exposure and auto gain.

Parameter	Auto Reference Value
Minimum	0
Maximum	255
Default	128
GigE Vision: GenICam	`ExposureAutoReference`
Type	Integer
VCD Property	`VCDID_Exposure\VCDElement_AutoReference`

5.3.4 Highlight Reduction

Enabling *Highlight Reduction* lets the auto exposure and auto gain functions reduce overexposed areas in the output image. This feature is particularly useful when using 10/12/16-bit output images and a tone mapping algorithm in post-processing when using higher bit depths as the dark areas still contain a lot of useful information.

Parameter	**Highlight Reduction**
`True`	Try to reduce overexposed areas
`False`	Ignore overexposed areas and focus on matching the image brightness to the selected Auto Reference Value.
GigE Vision: GenICam	`ExposureAutoHighlightReduction`
Type	Boolean
VCD Property	`VCDID_HighlightReduction\VCDElement_Value`

5.3.5 Auto Exposure Limits

The *Auto Exposure Lower Limit* parameter determines the minimum possible value that can be set by the auto exposure algorithm.

Parameter	**Auto Exposure Lower Limit**
Minimum	2 µs
Maximum	30 s
GigE Vision: GenICam	`ExposureAutoLowerLimit`
Type	Float

The *Auto Exposure Upper Limit* parameter determines the maximum possible value that can be set by the auto exposure algorithm.

Parameter	**Auto Exposure Upper Limit**
Minimum	2 µs
Maximum	30 s
GigE Vision: GenICam	`ExposureAutoUpperLimit`
Type	Float
VCD Property	`VCDID_Exposure\VCDElement_AutoMaxValue`

If the *Auto Exposure Upper Limit Auto* parameter is enabled, the value of *Auto Exposure Upper Limit* is automatically kept at the maximum possible value for the current frame rate.

Parameter	Auto Exposure Upper Limit Auto
`On`	Select *Auto Exposure Upper Limit* automatically
`Off`	Let the user control *Auto Exposure Upper Limit*
GigE Vision: GenICam	`ExposureAutoUpperLimitAuto`
Type	Enumeration
VCD Property	`VCDID_Exposure\VCDElement_AutoMaxValueAuto`

5.3.6 Auto Gain Limits

The *Auto Gain Lower Limit* parameter determines the minimum possible value that can be set by the auto gain algorithm.

Parameter	Auto Gain Lower Limit
Minimum	0 dB
Maximum	48 dB
GigE Vision: GenICam	`GainAutoLowerLimit`
Type	Float

The *Auto Gain Upper Limit* parameter determines the maximum possible value that can be set by the auto gain algorithm.

Parameter	Auto Gain Upper Limit
Minimum	0 dB
Maximum	48 dB
GigE Vision: GenICam	`GainAutoUpperLimit`
Type	Float

5.4 Lens Control

The DMK 39GX548-Z20 zoom camera features a lens with motorized zoom and focus control. Additionally, the IR cut filter can also be easily snapped in and out of place via the camera software.

5.4.1 Zoom

The *Zoom* parameter controls the zoom motor's movement of the motorized lens.

The zoom motor can be used to change the lens's focal length which in turn will change its magnification factor and field of view.

Parameter	Zoom
Minimum	0
Maximum	1000
Default	0
GigE Vision: GenICam	`Zoom`
Type	Integer
VCD Property	`VCDID_Zoom\VCDElement_Value`

5.4.2 Focus

The *Focus* parameter controls the movement of the focus motor in the motorized lens.

The focus motor can be used to change the focal plane, allowing the camera to resolve at other distances.

While the values of the *Focus* parameter are raw numbers, they correspond to distances: Low focus values map to shorter distances; high focus values map to longer distances.

Parameter	Focus
Minimum	0
Maximum	10000
Default	10000
GigE Vision: GenICam	`Focus`
Type	Integer
VCD Property	`VCDID_Focus\VCDElement_Value`

Important: Because depth of field decreases with increasing focal length (i.e. zoom value), bear in mind that an in-focus image will not remain sharp when zooming in. Therefore, adjustments to the focus values will usually need to be made if the Zoom parameters have been changed.

5.4.3 Iris

The *Iris* parameter controls the opening of the lens iris.

Low values correspond to a closed iris, while the maximum value opens the iris as far as possible.

Parameter	Iris
Minimum	0
Maximum	255
Default	255
GigE Vision: GenICam	`Iris`
Type	Integer
VCD Property	`VCDID_Iris\VCDElement_Value`

Important: The exact opening of the iris for a given *Iris* value differs from camera to camera. This implies that the minimum value for which the iris is not entirely closed may also differ.

5.4.4 Infrared Cut Filter

The *Infrared Cut Filter* parameter enables or disables the infrared cut filter of the lens.

Parameter	Infrared Cut Filter
`true`	The IR cut filter is enabled.
`false`	The IR cut filter is disabled.
GigE Vision: GenICam	`IRCutFilterEnable`
Type	Boolean
VCD Property	`VCDID_IRCutFilter\VCDElement_Value`

Important: Modern CMOS color sensors are very sensitive to infrared light. In order to achieve expected results, it is recommended that the infrared cut filter remain enabled when using a color camera.

5.4.5 Auto Focus

The *Auto Focus* function allows the camera to automatically adjust the lens to create a focused image.

The auto focus algorithm works by finding the maximum contrast of neighbouring pixel areas.

To get notified when the auto focus operation is completed, subscribe to notifications from the *Auto Focus* parameter and check is *isDone* status.

Parameter	Auto Focus
Execute	Run the auto focus algorithm
GigE Vision: GenICam	`FocusAuto`
Type	Command
VCD Property	`VCDID_Focus\VCDElement_OnePush`

5.4.6 Auto Focus ROI

The camera's auto focus algorithm can be instructed to only analyze a part of the image. If *Auto Focus ROI Enable* is set, only the pixels inside the rectangle specified by *Auto Focus ROI Left*, *Auto Focus ROI Top*, *Auto Focus ROI Width* and *Auto Focus ROI Height* will be used.

The rectangle is specified in absolute sensor coordinates; if the specified rectangle would be outside the currently active partial scan area, the camera automatically adjusts the size or position to form a valid rectangle.

Parameter	Auto Focus ROI Enable
`true`	Let auto focus only look at the specified rectangle
`false`	Let auto focus analyze the whole image
GigE Vision: GenICam	`AutoFocusROIEnable`
Type	Boolean
VCD Property	`VCDID_Focus\VCDElement_AutoFocusROIEnable`

Parameter	Auto Focus ROI Left
Minimum	0
Maximum	1920
GigE Vision: GenICam	`AutoFocusROILeft`
Type	Integer
VCD Property	`VCDID_Focus\VCDElement_AutoROILeft`

Parameter	Auto Focus ROI Top
Minimum	0
Maximum	1520
GigE Vision: GenICam	`AutoFocusROITop`
Type	Integer
VCD Property	`VCDID_Focus\VCDElement_AutoROITop`

Parameter	Auto Focus ROI Width
Minimum	128
Maximum	2048
GigE Vision: GenICam	`AutoFocusROIWidth`
Type	Integer

Parameter	Auto Focus ROI Height
Minimum	16
Maximum	1536
GigE Vision: GenICam	`AutoFocusROIHeight`
Type	Integer

5.4.7 Auto Iris

The *Auto Iris* parameter enables or disables the automatic control of the iris.

Used in conjunction with the features of Automatic Exposure and Gain Control, Auto Iris is adjusted between exposure and gain, meaning that the iris will be opened before gain is increased.

Parameter	Auto Iris
`true`	Enable Auto Iris control
`false`	Disable Auto Iris control
GigE Vision: GenICam	`IrisAuto`
Type	Boolean
VCD Property	`VCDID_Iris\VCDElement_Auto`

5.5 Trigger

The trigger mode can be used to take images at very specific points in time which are specified by an electrical signal connected to the TRIGGER_IN pin of the I/O connector of the camera.

5.5.1 Trigger Mode

The *Trigger Mode* parameter enables the trigger mode.

Parameter	Trigger Mode
`On`	Enable Trigger Mode
`True`	
`Off`	Disable Trigger Mode
`False`	
GigE Vision: GenICam	`TriggerMode`
Type	Enumeration
VCD Property	`VCDID_Trigger\VCDElement_Value`

5.5.2 Trigger Polarity

The *Trigger Polarity* parameter controls whether a trigger event is accepted on the rising or falling edge of the signal connected to the TRIGGER_IN line.

Parameter	Trigger Polarity
`RisingEdge`	Accept rising edge as trigger signal
`True`	
`FallingEdge`	Accept falling edge as trigger signal
`False`	
GigE Vision: GenICam	`TriggerActivation`
Type	Enumeration
VCD Property	`VCDID_Trigger\VCDElement_Polarity`

5.5.3 Software Trigger

The *Software Trigger* function can be used to simulate a trigger pulse, in turn causing one image to be exposed and delivered to the host computer.

Parameter	Software Trigger
Execute	Simulate one trigger pulse
GigE Vision: GenICam	`TriggerSoftware`
Type	Command
VCD Property	`VCDID_Trigger\VCDElement_SoftwareTrigger`

5.5.4 Trigger Burst Count

The *Trigger Burst Count* parameter allows the camera to be configured to take more than one image per trigger pulse. By default, this parameter is set to 1 so that exactly one image is acquired. The images are taken as rapidly as possible given current settings (i.e. as limited by the current exposure time and frame rate settings).

Parameter	Trigger Burst Count
Minimum	1
Maximum	1000
Default	1
GigE Vision: GenICam	`AcquisitionBurstFrameCount`
Type	Integer
VCD Property	`VCDID_Trigger\VCDElement_TriggerBurstCount`

5.5.5 Trigger Source

The *Trigger Source* parameter allows the camera to be configured to only accept trigger signals from a specified source, e.g. only software trigger.

Parameter	Trigger Source
`Any`	Allow trigger signals from any source
`Line1`	Allow only hardware trigger
`Software`	Allow only software trigger
GigE Vision: GenICam	`TriggerSource`
Type	Enumeration

5.5.6 IMX Low-Latency Mode

The *IMX Low-Latency Mode* parameter controls whether the sensor operates in low-latency trigger mode.

Parameter	IMX Low-Latency Mode
`True`	Delay between trigger input and start of exposure is exactly as configured through the *Trigger Delay* feature
`False`	Delay between trigger input and start of exposure is the time configured by the *Trigger Delay* feature in addition to a random delay depending on resolution, frame rate, and timing relative to the sensor's internal state
GigE Vision: GenICam	`IMXLowLatencyTriggerMode`
Type	Boolean
VCD Property	`VCDID_Trigger\VCDElement_IMXLowLatencyMode`

Important: If *IMX Low-Latency Mode* is enabled, *Trigger Overlap* is not allowed and is thereby forced to `Off`.

5.5.7 Trigger Overlap

The *Trigger Overlap* feature gives information on when a new trigger pulse is accepted in the trigger -> exposure -> readout sequence.

Parameter	Trigger Overlap
`Off`	The next trigger pulse is only accepted once the previous frame has been read out from the sensor
`Readout`	The next trigger pulse is accepted during readout as long as the remaining readout time is shorter than the exposure time
GigE Vision: GenICam	`TriggerOverlap`
Type	Enumeration
VCD Property	`VCDID_Trigger\VCDElement_TriggerOverlap`

5.5.8 Trigger Delay

The *Trigger Delay* parameter specifies a time for which the camera waits between receiving a trigger signal and starting the exposure of an image. Simulated trigger pulses generated through the *Software Trigger* function are not delayed by this parameter.

Parameter	Trigger Delay
Minimum	0 s
Maximum	1 s
GigE Vision: GenICam	`TriggerDelay`
Type	Float
VCD Property	`VCDID_Trigger\VCDElement_TriggerDelay`

5.6 Trigger Timing Parameters

The 39G series offers several options for dealing with bad trigger signals. By using the *Debounce Time*, *Denoise Time* and *Mask Time* parameters, the camera can be configured to ignore pulses on its TRIGGER_IN line under certain conditions.

Useful values for these parameters are application-specific. They depend on the expected trigger frequency, the exposure time and assumptions about the input signal quality.

The default values for all these parameters is 0 µs, assuming perfect signal quality.

5.6.1 Trigger Debounce Time

The *Trigger Debounce Time* parameter specifies the time for which the trigger input has to be low in order for the next trigger signal to be accepted.

Parameter	Trigger Debounce Time
Minimum	0 s
Maximum	1 s
Default	0 s
GigE Vision: GenICam	`TriggerDebouncer`
Type	Float
VCD Property	`VCDID_Trigger\VCDElement_TriggerDebouncer`

5.6.2 Trigger Mask Time

The *Trigger Mask Time* parameter specifies the time for which trigger pulses are ignored after accepting a trigger signal.

Parameter	Trigger Mask Time
Minimum	0 s
Maximum	1 s
Default	0 s
GigE Vision: GenICam	`TriggerMask`
Type	Float
VCD Property	`VCDID_Trigger\VCDElement_TriggerMask`

5.6.3 Trigger Noise Suppression Time

The *Trigger Noise Suppression Time* parameter specifies the time for which trigger input has to be active in order to be accepted as a trigger signal.

Parameter	Trigger Noise Suppression Time
Minimum	0 s
Maximum	1 s
Default	0 s
GigE Vision: GenICam	`TriggerDenoise`
Type	Float
VCD Property	`VCDID_Trigger\VCDElement_TriggerDenoise`

5.7 Digital I/O

39G series cameras have one digital input and one digital output. The digital input can be used as a Trigger input but the current status can also examined directly.

The digital output can be configured as a Strobe output to signal the exact moment when the image sensor is sensitive to light so that external light sources can be synchronized to its operation cycle.

5.7.1 General Purpose Input

The *General Purpose Input* parameter allows the current status of the TRIGGER_IN pin.

Parameter	General Purpose Input
`True`	TRIGGER_IN line status is low
`1`	
`False`	TRIGGER_IN line status is high
`0`	
GigE Vision: GenICam	`GPIn`
Type	Boolean
VCD Property	`VCDID_GPIO\VCDElement_GPIORead` `VCDID_GPIO\VCDElement_GPIOIn`

5.7.2 General Purpose Output

The *General Purpose Output* parameter controls the status of the STROBE_OUT pin.

Parameter	General Purpose Output
`True`	Drive the STROBE_OUT line high
`1`	
`False`	Drive the STROBE_OUT line low
`0`	
GigE Vision: GenICam	`GPOut`
Type	Boolean
VCD Property	`VCDID_GPIO\VCDElement_GPIOWrite` `VCDID_GPIO\VCDElement_GPIOOut`

5.8 Strobe

The strobe function controls the automatic generation of output pulses on the STROBE_OUT pin which is synchronized to the image sensor's exposure time.

5.8.1 Strobe Enable

The *Strobe Enable* parameter enables the automatic generation of strobe pulses.

Parameter	Strobe Enable
`On`	Strobe enabled
`True`	
`Off`	Strobe disabled
`False`	
GigE Vision: GenICam	`StrobeEnable`
Type	Enumeration
VCD Property	`VCDID_Strobe\VCDElement_Value`

5.8.2 Strobe Polarity

The *Strobe Polarity* parameter can be used to invert the strobe pulse output.

Parameter	Strobe Polarity
`ActiveHigh`	The STROBE_OUT pin is logically high during the exposure time
`True`	
`ActiveLow`	The STROBE_OUT pin is logically low during the exposure time
`False`	
GigE Vision: GenICam	`StrobePolarity`
Type	Enumeration
VCD Property	`VCDID_Strobe\VCDElement_StrobePolarity`

5.8.3 Strobe Operation

The *Strobe Operation* parameter specifies how the length of the strobe pulses are controlled.

Parameter	Strobe Operation
`Exposure`	Output pulse duration is equal to the current exposure time
`True`	
`FixedDuration`	Output pulse duration is specified by *Strobe Duration*
`False`	
GigE Vision: GenICam	`StrobeOperation`
Type	Enumeration
VCD Property	`VCDID_Strobe\VCDElement_StrobeMode`

5.8.4 Strobe Duration

The *Strobe Duration* parameter controls the length of the strobe pulses if *Strobe Operation* is set to use the fixed duration mode.

Parameter	Strobe Duration
Minimum	0 µs
Maximum	32767 µs
GigE Vision: GenICam	`StrobeDuration`
Type	Integer
VCD Property	`VCDID_Strobe\VCDElement_StrobeDuration`

5.8.5 Strobe Delay

The *Strobe Delay* parameter can be used to add a small delay between the start of exposure and the strobe output pulse.

Parameter	Strobe Delay
Minimum	0 µs
Maximum	32767 µs
GigE Vision: GenICam	`StrobeDelay`
Type	Integer
VCD Property	`VCDID_Strobe\VCDElement_StrobeDelay`

5.9 Image Processing

5.9.1 Gamma

39G series cameras can perform gamma correction on the image data. If the pixel format of a color camera is set a YUV mode, gamma correction is applied to the Y channel. In bayer raw and RGB24 modes, all color channels are subject to the same gamma correction.

Parameter	Gamma
Minimum	0.01
Maximum	5.0
Default	1.0
GigE Vision: GenICam	`Gamma`
Type	Float
VCD Property	`VCDID_Gamma\VCDElement_Value`

5.9.2 Lookup Table

The 39G series allows the user to specify a lookup table (LUT) that can transform pixel values. This lookup table can be used to perform tasks like histogram equalization inside the camera.

If the pixel format of a color camera is set to one of the YUV modes, the lookup table is applied only to the Y channel. In bayer raw and RGB24 modes, all color channels are subject to the same lookup operation.

The lookup table has 257 16-bit entries. The upper 8 bits of the image data are used to select the appropriate entry in the lookup table, while the remaining bits are used to interpolate between the selected entry and one of its neighbors.

The *LUT Enable* feature enables the lookup table.

Parameter	**LUT Enable**
`True`	Enable lookup table operation
`False`	Disable lookup table operation
GigE Vision: GenICam	`LUTEnable`
Type	Boolean

The lookup table values can be programmed using the *LUT Index* and *LUT Value* features.

Parameter	**LUT Index**
Minimum	0
Maximum	256
GigE Vision: GenICam	`LUTIndex`
Type	Integer

Parameter	**LUT Value**
Minimum	0
Maximum	65535
GigE Vision: GenICam	`LUTValue`
Type	Integer

The whole lookup table can be quickly reprogrammed through the *LUT Value All* feature.

Parameter	LUT Value All
`Value`	1028 bytes of memory containing 257 LUT entries. Each 16-bit LUT entry is aligned on a 32-bit boundary
GigE Vision: GenICam	`LUTValueAll`
Type	Register

Important: Since gamma correction is implemented using the same hardware as the lookup table, gamma correction is disabled when the lookup table is enabled.

5.10 Region of Interest for Auto Functions

39G series cameras allow for the setting of a region of interest that is used while controlling the Auto Exposure, Auto Gain and Auto White Balance functions.

5.10.1 Auto Functions ROI Enable

The *Auto Functions ROI Enable* parameter allows for the use of a region of interest for auto functions.

Parameter	Auto Functions ROI Enable
`True`	Auto functions only take a specified part of the image into account
`False`	Auto functions look at the whole image
GigE Vision: GenICam	`AutoFunctionsROIEnable`
Type	Boolean
VCD Property	`VCDID_AutoRoi\VCDElement_Value`

5.10.2 Auto Functions ROI Preset

The *Auto Functions ROI Preset* parameter lets the user select from a list of ROI presets.

Parameter	Auto Functions ROI Preset
`Full Sensor`	Select the full output image
`Center 50%`	Select a rectangular area in the center of the output image
`Center 25%`	Select a small rectangular area in the center of the output image
`Bottom Half`	Select the bottom half of the output image
`Top Half`	Select the top half of the output image
`Custom Rectangle`	Select a custom rectangle for fine-grained control
GigE Vision: GenICam	`AutoFunctionsROIPreset`
Type	Enumeration
VCD Property	`VCDID_AutoRoi\VCDElement_AutoRoiPreset`

5.10.3 Auto Functions ROI Custom Rectangle

When *Auto Functions ROI Preset* is set to *Custom Rectangle*, the user can manually set the position and size of the region of interest. The coordinates are relative to the origin of the current video format as specified by Partial Scan Offset.

Parameter	Auto Functions ROI Left
Minimum	0
Maximum	2432
Increment	2
GigE Vision: GenICam	`AutoFunctionsROILeft`
Type	Integer
VCD Property	`VCDID_AutoRoi \VCDElement_AutoRoiLeftRelative`

Parameter	Auto Functions ROI Top
Minimum	0
Maximum	2032
Increment	2
GigE Vision: GenICam	`AutoFunctionsROITop`
Type	Integer
VCD Property	`VCDID_AutoRoi \VCDElement_AutoRoiTopRelative`

Parameter	Auto Functions ROI Width
Minimum	16
Maximum	2448
Increment	2
GigE Vision: GenICam	`AutoFunctionsROIWidth`
Type	Integer
VCD Property	`VCDID_AutoRoi \VCDElement_AutoRoiWidthRelative`

Parameter	Auto Functions ROI Height
Minimum	16
Maximum	2048
Increment	2
GigE Vision: GenICam	`AutoFunctionsROIHeight`
Type	Integer
VCD Property	`VCDID_AutoRoi \VCDElement_AutoRoiHeightRelative`

5.11 User Sets

39G series cameras can store their complete configuration into built-in non-volatile memory. The camera configuration can be saved into and restored from one of two available memory slots upon user's request. Additionally, the camera can be configured to load one of the user's camera configurations at startup.

5.11.1 User Set Selector

The *User Set Selector* parameter selects the memory slot on which consecutive load and save commands are executed.

Parameter	User Set Selector
`UserSet1`	First of the two memory slots for user configurations
`UserSet2`	Second of the two memory slots for user configurations
`Default`	A special memory slot that always contains the camera's factory default configuration. It cannot be overwritten
GigE Vision: GenICam	`UserSetSelector`
Type	Enumeration

5.11.2 Load User Set

By using the *Load User Set* command, the user can restore the camera configuration from the memory slot selected by *User Set Selector*.

Parameter	Load User Set
Execute	Restore the camera configuration from the memory slot specified by *User Set Selector*
GigE Vision: GenICam	`UserSetLoad`
Type	Command

5.11.3 Save User Set

By using the *Save User Set* command, the user can save the camera configuration into the memory slot selected by *User Set Selector*.

Parameter	Save User Set
Execute	Save the current camera configuration into the memory slot specified by *User Set Selector*
GigE Vision: GenICam	`UserSetSave`
Type	Command

5.11.4 Default User Set

The *Default User Set* parameter controls the camera's startup behavior. It selects which memory slot is used for device initialization when the camera is powered up.

Parameter	Default User Set
`UserSet1`	Load configuration from the first memory slot
`UserSet2`	Load configuration from the second memory slot
`Default`	Load factory default configuration
GigE Vision: GenICam	`UserSetDefault`
Type	Enumeration

5.12 Multi-Frame Output Mode

Some 39G series cameras support cycling the exposure time through pre-programmed values from frame to frame in order to form a frame set. In post-processing, sets of frames captured with different exposure times can be used to create images with higher dynamic range than those from single exposure.

The camera can be configured to use 2 or 4 different exposure times.

If required, different gain values can be selected for use along with the configured exposure times.

5.12.1 Multi-Frame Output Mode Enable

The *Multi-Frame Output Mode Enable* parameter activates the multi-frame output mode.

Parameter	Multi-Frame Output Mode Enable
`True`	Cycle through the exposure times specified by Multi-Frame Output Mode Exposure Time
`False`	Use the exposure time defined by Exposure Time for all frames
GigE Vision: GenICam	`MultiFrameSetOutputModeEnable`
Type	Boolean
VCD Property	`VCDID_MultiFrameOutputMode \VCDElement_Value`

5.12.2 Multi-Frame Output Mode Frame Count

The *Multi-Frame Output Mode Frame Count* parameter defines the number of frames in a frame set.

Parameter	Multi-Frame Output Mode Frame Count
`2 Frames`	Use two different exposure times
`4 Frames`	Use four different exposure times
GigE Vision: GenICam	`MultiFrameSetOutputModeFrameCount`
Type	Enumeration
VCD Property	`VCDID_MultiFrameOutputMode \VCDElement_MultiFrameCount`

5.12.3 Multi-Frame Output Mode Exposure Time

The *Multi-Frame Output Mode Exposure Time* parameters control the different exposure times in a frame set.

Parameter	Multi-Frame Output Mode Exposure Time
Minimum	20 µs
Maximum	30000000 µs

GigE Vision: GenICam	`MultiFrameSetOutputModeExposureTime0`
	`MultiFrameSetOutputModeExposureTime1`
	`MultiFrameSetOutputModeExposureTime2`
	`MultiFrameSetOutputModeExposureTime3`

Type	Float

VCD Property	`VCDID_MultiFrameOutputMode`
	`\VCDElement_MultiFrameExposure0`
	`\VCDElement_MultiFrameExposure1`
	`\VCDElement_MultiFrameExposure2`
	`\VCDElement_MultiFrameExposure3`

5.12.4 Multi-Frame Output Mode Custom Gain

The *Multi-Frame Output Mode Custom Gain* parameter allows specifying different gain values for each frame in a frame set.

Parameter	Multi-Frame Output Mode Custom Gain
`True`	Cycle through the gain values specified by Multi-Frame Output Mode Gain
`False`	Use the gain value defined by Gain
GigE Vision: GenICam	`MultiFrameSetOutputModeCustomGain`
Type	Boolean
VCD Property	`VCDID_MultiFrameOutputMode` `\VCDElement_MultiFrameCustomGainEnable`

5.12.5 Multi-Frame Output Mode Gain

The *Multi-Frame Output Mode Gain* parameters controls the gain values used to capture the images of the frame set.

Parameter	Multi-Frame Output Mode Gain
Minimum	0 dB
Maximum	48 dB

GigE Vision: GenICam	`MultiFrameSetOutputModeGain0`
	`MultiFrameSetOutputModeGain1`
	`MultiFrameSetOutputModeGain2`
	`MultiFrameSetOutputModeGain3`

Type	Float

VCD Property	`VCDID_MultiFrameOutputMode`
	`\VCDElement_MultiFrameGain0`
	`\VCDElement_MultiFrameGain1`
	`\VCDElement_MultiFrameGain2`
	`\VCDElement_MultiFrameGain3`

5.13 Precision Time Protocol

All 39G series cameras can synchronize its internal clock to other devices via *Precision Time Protocol* (PTP, IEEE 1588).

When multiple PTP devices are connected through the same network, they will synchronize their clocks. This allows the image timestamps to remain comparable between cameras.

A camera running with PTP enabled can also schedule actions to be executed at a specified time point in the future through *Scheduled Actions*.

PTP is enabled by default.

5.13.1 PTP Enable

The *PTP Enable* parameter enables or disables the camera's usage of the *Precision Time Protocol*.

Parameter	PTP Enable
`True`	Use Precision Time Protocol
`False`	PTP disabled
GigE Vision: GenICam	`PtpEnable`
Type	Boolean

5.13.2 PTP Status

PTP Status is a read-only feature that reports the current status of the *Precision Time Protocol* algorithm.

Parameter	PTP Status
`Master`	The camera acts as PTP master clock.
`Slave`	The camera synchronizes its time stamp to a PTP master clock.
`Uncalibrated`	PTP was recently enabled, or a recent change in the network configuration initiated a resynchronization.
`Disabled`	PTP is disabled.
GigE Vision: GenICam	`PtpStatus`
Type	Enumeration

5.14 Action Scheduler

When *Precision Time Protocol* is enabled, the action scheduler can be used to plan and run actions at some point in the future.

The only action the camera can perform right now is triggering images.

Action triggers are only accepted when Trigger Source is set to `Action0` or `Any`.

5.14.1 Action Selector

The *Action Selector* feature selects the action that the Action Scheduler Time, Action Scheduler Interval, Action Scheduler Commit and Action Scheduler Cancel features act on.

Parameter	Action Selector
`0`	`Action0`, which is hard-wired to trigger images
GigE Vision: GenICam	`ActionSelector`
Type	Enumeration

5.14.2 Action Scheduler Time

The *Action Scheduler Time* is the time for when an action is scheduled, specified as a PTP timestamp in nanosecond units.

Scheduling the action to a time in the past will cause the action to be performed immediately.

Scheduling a repeated action to start in the past will ignore missed actions and continue as if it had been scheduled earlier.

Parameter	Action Scheduler Time
GigE Vision: GenICam	`ActionSchedulerTime`
Type	Integer

5.14.3 Action Scheduler Interval

The *Action Scheduler Interval* feature allows instructing the action scheduler to repeat the scheduled action in a fixed interval, indefinitely.

If the interval is set to 0, the action is performed once and not repeated.

The interval is specified in microseconds.

Parameter	Action Scheduler Interval
Minimum	0
Maximum	`4294967295 us`
GigE Vision: GenICam	`ActionSchedulerInterval`
Type	Integer

5.14.4 Action Scheduler Commit

Executing the *Action Scheduler Commit* command commits an action to the queue of scheduled actions.

The action is planned to be performed at the time specified by Action Scheduler Time.

If Action Scheduler Interval has a value other than 0, the action will be repeated with the specified interval indefinitely, or until the Action Scheduler Cancel command is executed.

There is a finite number of queue slots available, trying to queue too many actions will fail. The maximum length of the queue is reported by the `ActionQueueSize` feature.

Parameter	Action Scheduler Commit
Execute	Schedule the action specified by Action Selector to be performed at a specified time in the future.
GigE Vision: GenICam	`ActionSchedulerCommit`
Type	Command

5.14.5 Action Scheduler Cancel

Executing the *Action Scheduler Cancel* command cancels all scheduled actions of the action type selected by Action Selector.

Parameter	Action Scheduler Cancel
Execute	Cancel all scheduled actions of the type specified by Action Selector.
GigE Vision: GenICam	`ActionSchedulerCancel`
Type	Command

5.15 Events

39G series devices can send asynchronous event packets, notifying the application about certain events during device operation.

To enable a specific event, select the event to enable in Event Selector and then set Event Notification to *On*.

The way to receive the event notifications depends on the used camera SDK. In most cases, a notification handler has to be registered on the feature named after the event, e.g. *EventTest* or *EventExposureEnd*. Additional event data can often be queried via additional features with a derived name, e.g. *EventTestTimestamp* or *EventExposureEndFrameID*.

5.15.1 Event Selector

The *Event Selector* parameter selects an event to configure.

Parameter	Event Selector
`ExposureEnd`	Selects the ExposureEnd event
`FrameTriggerMissed`	Selects the FrameTriggerMissed event
`Line1FallingEdge`	Selects the Line1FallingEdge event
`Line1RisingEdge`	Selects the Line1RisingEdge event
`FocusMoveCompleted`	Selects the FocusMoveCompleted event
`ZoomMoveCompleted`	Selects the ZoomMoveCompleted event
`Test`	Selects the Test event
GigE Vision: GenICam	`EventSelector`
Type	Enumeration

5.15.2 Event Notification

The *Event Notification* parameter enables or disables the event selected by Event Selector.

Parameter	Event Notification
`On`	Enables notifications for the selected event
`Off`	Disables notifications for the selected event
GigE Vision: GenICam	`EventNotification`
Type	Enumeration

5.15.3 Event Exposure End

The *Event Exposure End* feature is notified when the camera completes the exposure of an image.

It can be useful to synchronize camera exposure with real-world events, e.g. moving parts in front of the camera.

The value of this feature has no meaning and should not be read.

Parameter	Event Exposure End
GigE Vision: GenICam	`EventExposureEnd`
Type	Integer

The *Event Exposure End Timestamp* parameter identifies the point in time when the current exposure end event occurred.

Please refer to the documentation of your camera SDK on how to safely read the timestamp associated with the current event when a notification is received.

Parameter	Event Exposure End Timestamp
GigE Vision: GenICam	`EventExposureEndTimestamp`
Type	Integer

The *Event Exposure End Frame ID* parameter the frame number of the frame whose exposure was completed.

Please refer to the documentation of your camera SDK on how to safely read the timestamp associated with the current event when a notification is received.

Parameter	Event Exposure End Frame ID
GigE Vision: GenICam	`EventExposureEndFrameID`
Type	Integer

5.15.4 Event Frame Trigger Missed

The *Event Frame Trigger Missed* feature is notified when the camera receives a trigger pulse, but the sensor was not in a state where a new exposure could be started.

The value of this feature has no meaning and should not be read.

Parameter	Event Frame Trigger Missed
GigE Vision: GenICam	`EventFrameTriggerMissed`
Type	Integer

The *Event Frame Trigger Missed Timestamp* parameter identifies the point in time when the current frame trigger missed event occurred.

Please refer to the documentation of your camera SDK on how to safely read the timestamp associated with the current event when a notification is received.

Parameter	Event Frame Trigger Missed Timestamp
GigE Vision: GenICam	`EventFrameTriggerMissedTimestamp`
Type	Integer

5.15.5 Event Line1 Falling Edge

The *Event Line1 Falling Edge* feature is notified when the input on Line1 changes from high to low.

The value of this feature has no meaning and should not be read.

Parameter	Event Line1 Falling Edge
GigE Vision: GenICam	`EventLine1FallingEdge`
Type	Integer

The *Event Line1 Falling Edge Timestamp* parameter identifies the point in time when the current line1 falling edge event occurred.

Please refer to the documentation of your camera SDK on how to safely read the timestamp associated with the current event when a notification is received.

Parameter	Event Line1 Falling Edge Timestamp
GigE Vision: GenICam	`EventLine1FallingEdgeTimestamp`
Type	Integer

5.15.6 Event Line1 Rising Edge

The *Event Line1 Rising Edge* feature is notified when the input on Line1 changes from high to low.

The value of this feature has no meaning and should not be read.

Parameter	Event Line1 Rising Edge
GigE Vision: GenICam	`EventLine1RisingEdge`
Type	Integer

The *Event Line1 Rising Edge Timestamp* parameter identifies the point in time when the current line1 rising edge event occurred.

Please refer to the documentation of your camera SDK on how to safely read the timestamp associated with the current event when a notification is received.

Parameter	Event Line1 Rising Edge Timestamp
GigE Vision: GenICam	`EventLine1RisingEdgeTimestamp`
Type	Integer

5.15.7 Event Focus Move Completed

The *Event Focus Move Completed* feature is notified when the lens reaches the position requested by manually setting Focus.

This event feature is *not* notified for focus movements issued by executing Auto Focus.

The value of this feature has no meaning and should not be read.

Parameter	Event Focus Move Completed
GigE Vision: GenICam	`EventFocusMoveCompleted`
Type	Integer

The *Event Focus Move Completed Timestamp* parameter identifies the point in time when the current focus move completed event occurred.

Please refer to the documentation of your camera SDK on how to safely read the timestamp associated with the current event when a notification is received.

Parameter	Event Focus Move Completed Timestamp
GigE Vision: GenICam	`EventFocusMoveCompletedTimestamp`
Type	Integer

The *Event Focus Move Completed Focus* parameter contains the focus value associated with the current focus move completed event.

Please refer to the documentation of your camera SDK on how to safely read the focus value associated with the current event when a notification is received.

Parameter	Event Focus Move Completed Focus
GigE Vision: GenICam	`EventFocusMoveCompletedFocus`
Type	Integer

5.15.8 Event Zoom Move Completed

The *Event Zoom Move Completed* feature is notified when the lens reaches the position requested by manually setting Zoom.

The value of this feature has no meaning and should not be read.

Parameter	Event Zoom Move Completed
GigE Vision: GenICam	`EventZoomMoveCompleted`
Type	Integer

The *Event Zoom Move Completed Timestamp* parameter identifies the point in time when the current zoom move completed event occurred.

Please refer to the documentation of your camera SDK on how to safely read the timestamp associated with the current event when a notification is received.

Parameter	Event Zoom Move Completed Timestamp
GigE Vision: GenICam	`EventZoomMoveCompletedTimestamp`
Type	Integer

The *Event Zoom Move Completed Zoom* parameter contains the zoom value associated with the current zoom move completed event.

Please refer to the documentation of your camera SDK on how to safely read the zoom value associated with the current event when a notification is received.

Parameter	Event Zoom Move Completed Zoom
GigE Vision: GenICam	`EventZoomMoveCompletedZoom`
Type	Integer

5.15.9 Event Test

The *Event Test* feature is notified when a test event occurs.

To generate a test event, use the *Test Event Generate* command.

The value of this feature has no meaning and should not be read.

Parameter	Event Test
GigE Vision: GenICam	`EventTest`
Type	Integer

The *Event Test Timestamp* parameter identifies the point in time when the current test event occurred.

Please refer to the documentation of your camera SDK on how to safely read the timestamp associated with the current event when a notification is received.

Parameter	Event Test Timestamp
GigE Vision: GenICam	`EventTestTimestamp`
Type	Integer

The *Test Event Generate* command can be used to generate a test event.

Parameter	Test Event Generate
Execute	Generate one test event
GigE Vision: GenICam	`TestEventGenerate`
Type	Command

5.16 Chunk Data

Some 39G series devices can send chunk data alongside the capture images, containing additional information about the captured frames.

To enable the transmission of chunk data, Chunk Mode Active has to be enabled.

To enable specific information to be included as part of the chunk data, select the chunk to enable in Chunk Selector and then enable Chunk Enable. Please note that certain chunkdata parts can be stuck to always-on.

The way to receive the chunk depends on the used camera SDK. In most cases, a received frame has to be attached to the device's property interface. After that, the chunk's values are readable like other device properties.

5.16.1 Chunk Mode Active

The *Chunk Mode Active* parameter enables the transmission of chunk data alongside the image data.

Please note that enabling chunk data changes the transmitted image data format. The chunk format is not necessarily supported by all GigEVision drivers.

Parameter	Chunk Mode Active
`True`	Enable chunk data transmission
`False`	Disable chunk data transmission
GigE Vision: GenICam	`ChunkModeActive`
Type	Boolean

5.16.2 Chunk Selector

The *Chunk Selector* parameter selects a chunkdata item to configure.

Parameter	Chunk Selector
`ExposureTime`	Selects ExposureTime chunk
`Gain`	Selects Gain chunk
GigE Vision: GenICam	`ChunkSelector`
Type	Enumeration

5.16.3 Chunk Enable

The *Chunk Enable* parameter enables or disables the chunkdata item selected by *Chunk Selector*.

Parameter	Chunk Enable
`True`	Enables the selected chunkdata part
`False`	Disables the selected chunkdata part
GigE Vision: GenICam	`ChunkEnable`
Type	Boolean

5.16.4 Chunk Exposure Time

The *Chunk Exposure Time* parameter contains the exposure time used when capturing the image.

Parameter	Chunk Exposure Time
Minimum	2 µs
Maximum	30 s
GigE Vision: GenICam	`ChunkExposureTime`
Type	Float

5.16.5 Chunk Gain

The *Chunk Gain* parameter contains the gain value used when capturing the image.

Parameter	Chunk Gain
Minimum	0 dB
Maximum	48 dB
GigE Vision: GenICam	`ChunkGain`
Type	Float

5.17 Bandwidth Control

When using multiple 39G series devices connected to the same network adapter, the data rate has to be considered to allow consistent operation.

To limit the bandwith of a camera, set Device Link Throughput Limit Mode to `On`, and set Device Link Throughput Limit to the desired maximum data rate.

5.17.1 Device Link Throughput Limit Mode

The *Device Link Throughput Limit Mode* parameter enables or disables the effect of Device Link Throughput Limit.

If set, the camera's internal frame rate is automatically reduced to fit into the available bandwith.

An inter-packet delay is added between streaming packets to ensure the network bandwidth does not exceed the limit.

Parameter	Device Link Throughput Limit Mode
`Off`	The bandwith the device uses for streaming is unlimited.
`On`	The maximum bandwidth the device uses for streaming is defined by Device Link Throughput Limit.
GigE Vision: GenICam	`DeviceLinkThroughputLimitMode`
Type	Enumeration

5.17.2 Device Link Throughput Limit

The *Device Link Throughput Limit* parameter defines the maximum bandwidth used by the device to stream data.

Device Link Throughput Limit Mode must be set to `On` for *Device Link Throughput Limit* to have an effect.

Parameter	Device Link Throughput Limit
Minimum	1000000 Bps
Maximum	125000000 Bps
GigE Vision: GenICam	`DeviceLinkThroughputLimit`
Type	Integer

6 Zoom Lens Information

6.1 Minimum Object Distance

The minimum object distance of the lens depends on the current Zoom setting. The following diagram approximates the relationship between the focal length (f) of the lens and the minimum object distance (MOD):

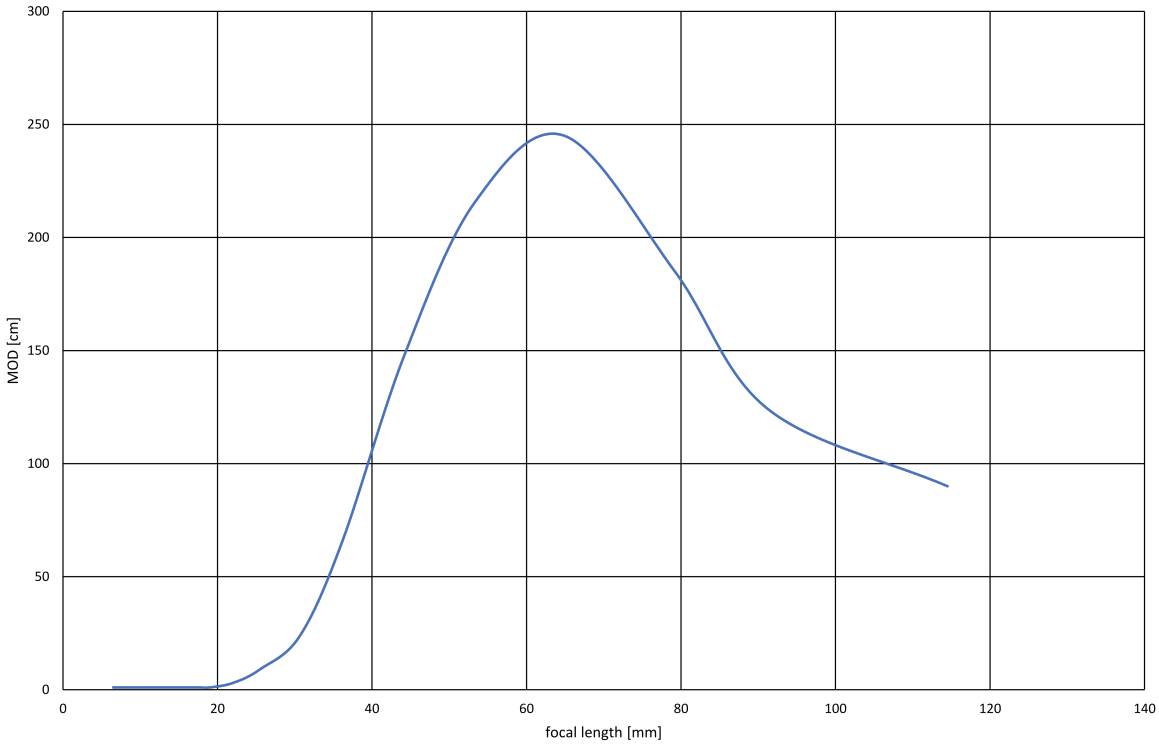

6.2 Zoom Factor

The following table shows the relation between the Zoom setting and the resulting focal length, measured at a distance of 2.5m:

Zoom	Focal Length [mm]
0	6.5
50	7.2
100	7.9
150	8.9
200	9.6
250	10.5
300	11.8
350	13.2
400	14.7
450	17.7
500	19
550	22
600	25.5
650	30.7
700	36.2
750	44.2
800	53.4
850	64.9
900	79.2
950	91.3
1000	114.5

7 Status LEDs

7.1 LEDs on the RJ45 Connector

The LEDs on the RJ45 connector show the network connection status and network activity.

LED	Description
Green	On when connected to Gigabit Ethernet
Orange	Network activity indicator

7.2 RGB Status LED

The zoom camera has one RGB status LED on its rear side.

Color	Description
Blue, blinking	Startup, running IP configuration
Blue	Idle
Green	Stream active, not sending images (e.g. Trigger Mode)
Yellow	Stream active, sending images
Red, various blink codes	Hardware error. Please contact support.

Please note that the perceived color can be influenced by the viewing angle.

8 Revision History

Date	Version	Description
2022/01/24		Initial release of this document
2023/07/19		Update environmental section in quick facts chapter
2023/07/26	Firmware 2966	Add ChunkExposureTime, ChunkGain features
2023/07/26	Firmware 2966	Add EventExposureEnd, EventFrameTriggerMissed, EventLine1RisingEdge, EventLine1FallingEdge, EventFocusMoveCompleted, EventZoomMoveCompleted features
2024/11/07	Firmware 3175	Add DeviceLinkThroughputLimit feature

DMK 39GX548-Z20 Technical Reference Manual

All product and company names in this document may be trademarks and tradenames of their respective owners and are hereby acknowledged.

The Imaging Source Europe GmbH cannot and does not take any responsibility or liability for any information contained in this document. The source code presented in this document is exclusively used for didactic purposes. The Imaging Source does not assume any kind of warranty expressed or implied, resulting from the use of the content of this document or the source code.

The Imaging Source Company reserves the right to make changes in specifications, function or design at any time and without prior notice.

Last update: May 2026
© 2026 The Imaging Source
All rights reserved. Reprint, also in parts, only allowed with permission of The Imaging Source Europe GmbH.

All weights and dimensions are approximate. Unless otherwise specified, the lenses shown in the context of cameras are not shipped with these cameras.

Headquarters:

The Imaging Source Europe GmbH
Überseetor 18, D-28217 Bremen, Germany
Phone: +49 421 33591-0

North & South America:

The Imaging Source, LLC
4600 Park Road, Suite 470, Charlotte, NC 28209, United States
Phone: +1 877-462-4772

Asia Pacific:

The Imaging Source Asia Co., Ltd.
3F., No. 43-7/8, Zhongxing Road
Xizhi District, New Taipei City 221012, Taiwan
Phone: +886 2-2792-3153

www.theimagingsource.com