Technical Details

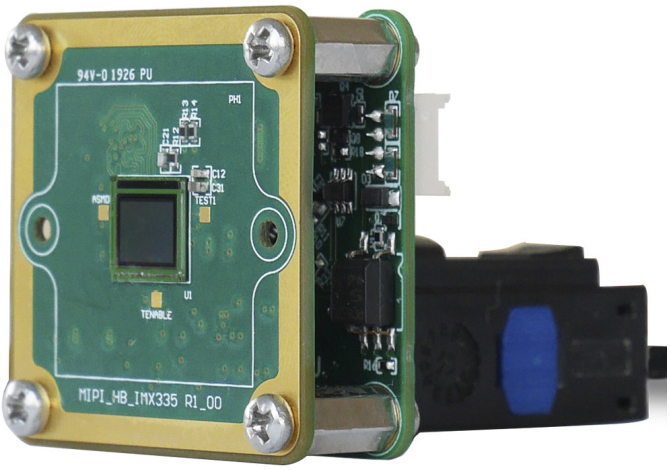

DMM 36CX568-ML
Technical Reference Manual

THE IMAGINGSOURCE
TECHNOLOGY BASED ON STANDARDS

Table of Contents

1. Quick Facts 3

2. Electrical Characteristics 4

2.1 Absolute Maximum Ratings 4

2.2 Recommended Operating Conditions 4

3. Dimensional Diagrams 5

3.1 DMM 36CX568-ML Board Camera 5

4. Spectral Characteristics 6

4.1 Spectral Sensitivity - IMX568-AAMJ-C 6

5. I/O Connector 7

6. FPD-Link Serializer I/O Signals 9

7. I2C I/O Expander Configuration 10

8. I2C Devices 11

9. Status LEDs 12

10. Trigger Control FPGA 13

1 Quick Facts

General	
Dynamic Range	10 bit
Resolution	2448x2048
Frame Rate at Full Resolution	48
Pixel Formats	10-Bit Monochrome

Optical Interface	
Sensor Type	Sony IMX568-AAMJ-C
Shutter Type	Global
Sensor Format	1/1.8 inch
Pixel Size	2.74 µm

Electrical Interface	
Interface	FPD-Link III via FAKRA connector
Supply voltage	10-27V
Current consumption	approx 120 mA @ 18 VDC

Mechanical Data	
Dimensions	H: 30 mm, W: 30 mm, L: 27.5 mm
Mass	12 g

Adjustments	
Shutter	15 µs to 1 s
Gain	0 dB to 48 dB

Environmental	
Temperature (operating)	-5 °C to 45 °C
Temperature (storage)	-20 °C to 60 °C
Humidity (operating)	20 % to 80 % (non-condensing)
Humidity (storage)	20 % to 95 % (non-condensing)

2 Electrical Characteristics

2.1 Absolute Maximum Ratings

Item	Symbol	Pins	Min	Max	Unit
Supply voltage	V_COAX		-0.3	+27.0	V

2.2 Recommended Operating Conditions

Item	Symbol	Pins	Min	Typ	Max	Unit
Supply voltage	V_COAX		9.0	18.0	24.0	V

3 Dimensional Diagrams

3.1 DMM 36CX568-ML Board Camera

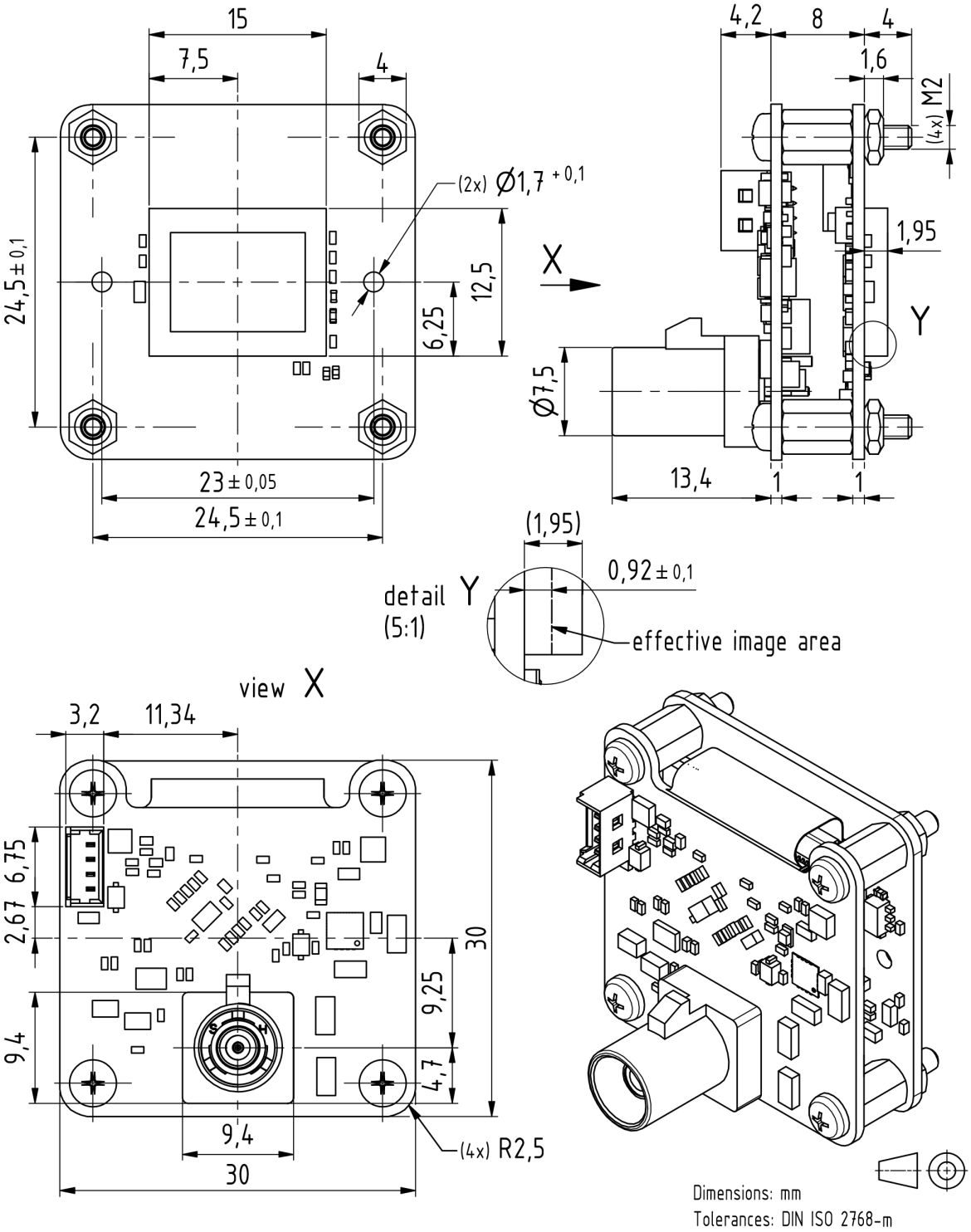

4 Spectral Characteristics

4.1 Spectral Sensitivity - IMX568-AAMJ-C

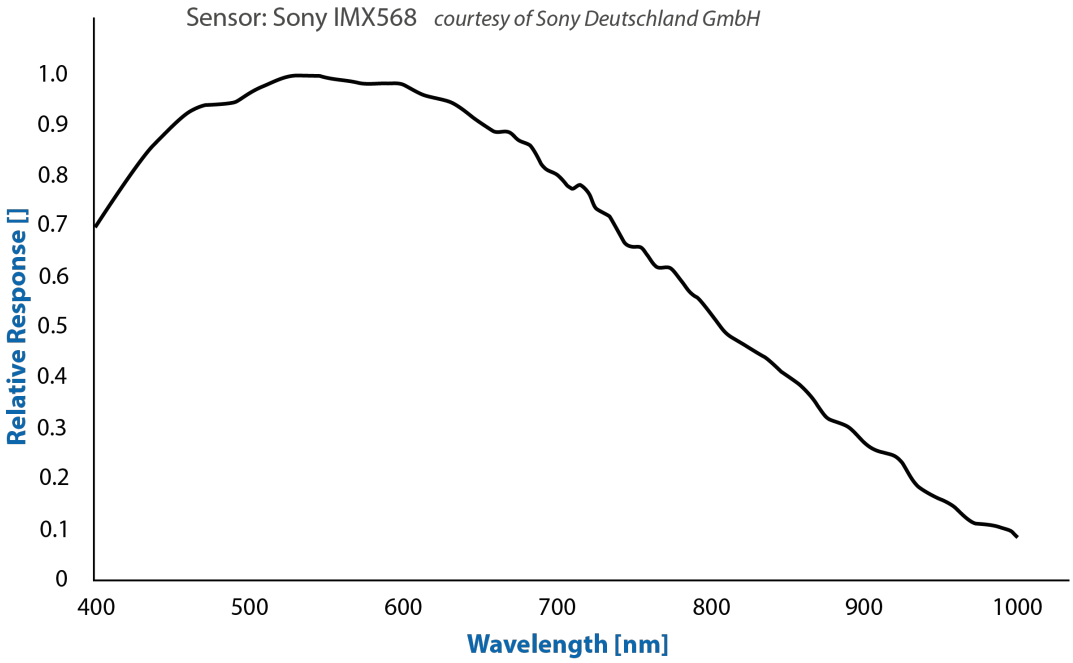

5 I/O Connector

The DMM 36CX568-ML camera has a user GPIO I/O connector with the following pinout:

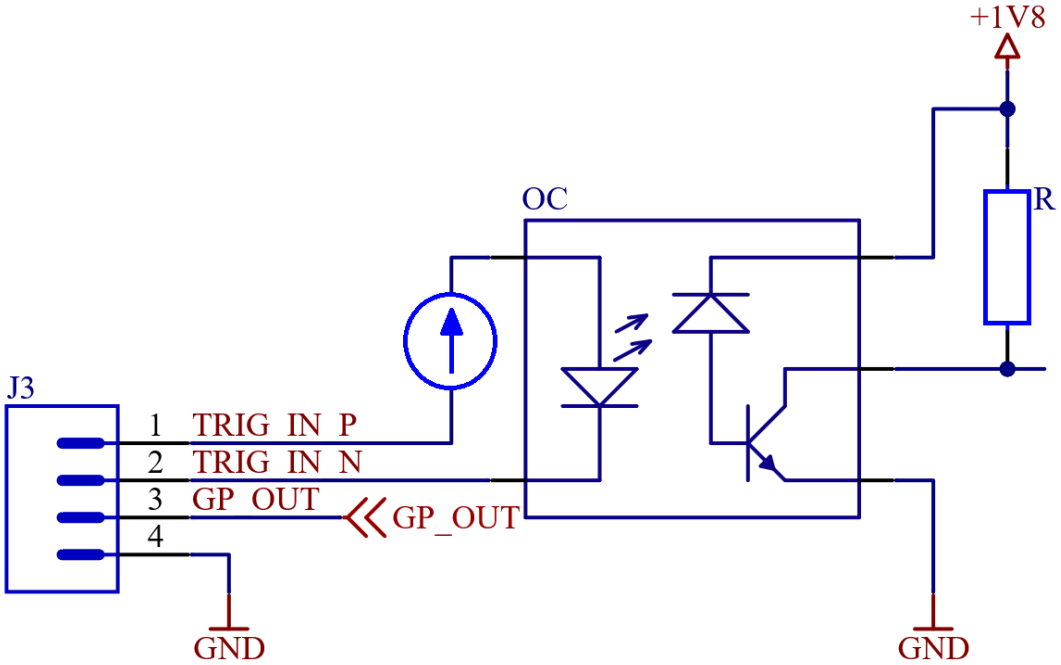

Pin	Name	Description
1	TRIGGER_IN_P	Opto-decoupled trigger input, anode of IR-LED
2	TRIGGER_IN_N	Opto-decoupled trigger input, cathode of IR-LED
3	GP_OUT	General purpose output, referenced to GND
4	GND	System ground

The trigger input is opto-decoupled. To drive the trigger input, a voltage must be applied to pins 1 and 2. Note: pin 1 is the positive input; pin 2 is the negative input.

Pin 3 is a general-purpose output pin that can be controlled via software. The pin can be configured for TTL mode output or open drain output. LED2 indicates a possible overcurrent.

The recommended operating conditions of the user GPIO connector J3 are displayed in the following tables. CAUTION: Functional operation beyond the recommended operating conditions is not assumed.

Parameter	Min	Max
Trigger input voltage	3.15V	25.5V

Parameter	Min	Max
TTL-mode high voltage	-	250mA @ 4V
TTL-mode low voltage	-	250mA @ 0.05V

Parameter	Min	Max
Open-drain-mode voltage	-	24V
Open-drain-mode current	-	250mA

Please ensure that enough additional power is provided via the embedded system to operate the connected devices at the user GPIO connector (J3).

6 FPD-Link Serializer I/O Signals

The serializer chip DS90UB953-Q1 (Texas Instruments) has 4 GPIO pins. Their purpose is described in the following table:

Pin	Name	Dir	Description
17 (GPIO0)	STROBE	I	Strobe signal from CMOS sensor
18 (GPIO1)	TRIGGER_SER	I	External trigger signal from serializer board
27 (GPOI2)	TRIGGER	O	Trigger signal to the CMOS sensor
28 (GPOI3)	RESERVED1_GPIO3	I/O	Reserved signal

The serializer's CLK_OUT (19) pin is connected to the sensor's clock input. This means that the sensor's clock frequency is controlled through serializer PLL registers.

7 I2C I/O Expander Configuration

Various I/O functionalities of the camera are controlled through a I2C I/O Expander.

The TCA6408A part has the 7-bit I2C-address 0x20. The table below depicts which signals can be controlled through this expander:

I/O Pin	Name	Dir	Description
P0	CAM_PWR	O	Enable CMOS sensor power supply 0: Sensor power disabled 1: Sensor power enabled
P1	RESET	O	CMOS sensor reset signal 0: Sensor is in reset state 1: Sensor is in operational state
P2	GPOUT_LEVEL	O	If GPOUT_SELECT = 0: --->0: LED1 off --->1: LED1 on If GPOUT_SELECT = 1: --->0: GPOUT is low/0 V --->1: GPOUT is tri-stated or high/+5V (depends on the setting of P3)
P3	GPOUT_PUSHPULL	O	GPOUT (PicoBlade) type selection 0: GPOUT is configured as open-drain-output 1: GPOUT is configured as TTL/push-pull-output
P4	GPOUT_SELECT	O	Function of GPOUT (PicoBlade) Pin 0: STROBE from CMOS sensor board 1: GPOUT_LEVEL from serializer board
P5	TRIGGER_LEVEL	O	Controls the polarity of the trigger input on the PicoBlade connector. 0: Trigger source level polarity is not inverted 1: Trigger source level polarity is inverted
P6	TRIGGER_SOURCE	O	Controls the source of the trigger signal that is forwarded to the sensor. 0: Sensor is triggered by the trigger signal coming from the FPD-Link / deserializer chip. 1: Sensor is triggered by the trigger signal that is applied to the PicoBlade I/O connector.
P7	RESERVED_7	O	Reserved

8 I2C Devices

There are multiple I2C devices on the DMM 36CX568-ML sensor board. The following table describes the parts and their I2C addresses:

Address (7-bit)	Device	Description
0x1A	IMX568-AAMJ-C	Image Sensor
0x20	TCA6408A	I/O Expander
0x40	LCMXO3L-1300E	Trigger Control FPGA (configuration)
0x42	LCMXO3L-1300E	Trigger Control FPGA (control)
0x50	AT24C256C	EEPROM
0x57	AT24C02C	EEPROM

9 Status LEDs

There are two status LEDs on the serializer board:

Name	Color	Description
LED1	Green	Controlled through GPOUT_LEVEL on the I/O expander
LED2	Red	Indicates overcurrent flowing out of GP_OUT in TTL/push-pull mode.

10 Trigger Control FPGA

In order to handle complex trigger/strobe functions of the image sensor, a FPGA is present the on sensor board.

A reference driver implementation is available upon request.

DMM 36CX568-ML

All product and company names in this document may be trademarks and tradenames of their respective owners and are hereby acknowledged.

The Imaging Source Europe GmbH cannot and does not take any responsibility or liability for any information contained in this document. The source code presented in this document is exclusively used for didactic purposes. The Imaging Source does not assume any kind of warranty expressed or implied, resulting from the use of the content of this document or the source code.

The Imaging Source Company reserves the right to make changes in specifications, function or design at any time and without prior notice.

Last update: July 2026
© 2026 The Imaging Source Europe GmbH
All rights reserved. Reprint, also in parts, only allowed with permission of The Imaging Source Europe GmbH.

All weights and dimensions are approximate. Unless otherwise specified, the lenses shown in the context of cameras are not shipped with these cameras.

Headquarters:

The Imaging Source Europe GmbH
Überseetor 18, D-28217 Bremen, Germany
Phone: +49 421 33591-0

North & South America:

The Imaging Source, LLC
Suite 470, 4600 Park Road, Charlotte, NC 28209, United States
Phone: +1 877-462-4772

Asia Pacific:

The Imaging Source Asia Co., Ltd.
3F., No. 43-7/8, Zhongxing Road
Xizhi District, New Taipei City 221012, Taiwan
Phone: +886 2-2792-3153

www.theimagingsource.com