Technical Details

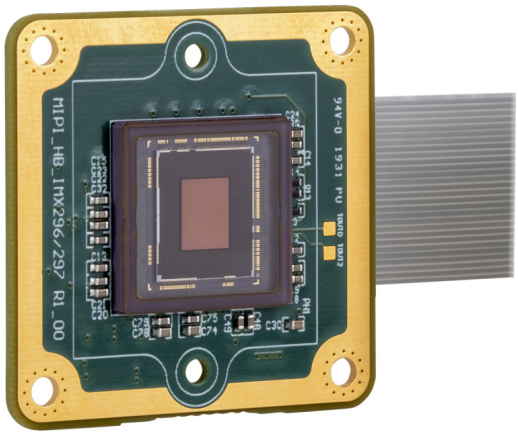

DMM 36SX462-ML
Technical Reference Manual

THE IMAGINGSOURCE
TECHNOLOGY BASED ON STANDARDS

Table of Contents

1. Quick Facts 3

2. Electrical Characteristics 5

2.1 Absolute Maximum Ratings 5

2.2 Recommended Operating Conditions 5

3. Dimensional Diagrams 6

3.1 DMM 36SX462-ML Board Camera 6

4. Spectral Characteristics 7

4.1 Spectral Sensitivity - IMX462 7

5. 22-Pin Camera Connector 8

6. I2C Devices 10

7. Programming the Image Sensor 11

7.1 Input Clock 11

7.2 Power-up Sequence 11

7.3 Further Assistance 11

8. Temperature Measurement Point 12

1 Quick Facts

General	
Dynamic Range	12 bit
Resolution	1920x1080
Frame Rate at Full Resolution	120
Pixel Formats	10-Bit Monochrome 12-Bit Monochrome

Optical Interface	
Sensor Type	Sony IMX462
Shutter Type	Rolling
Sensor Format	1/2.8 inch
Pixel Size	2.9 µm

Electrical Interface	
Interface	22-Pin FFC Connector
Supply voltage	3.3V (±5%)
Current consumption	approx 190 mA @ 3.3 VDC

Mechanical Data	
Dimensions	H: 30 mm, W: 30 mm, L: 6 mm
Mass	4 g

Adjustments	
Shutter	15 µs to 1 s
Gain	0 dB to 72 dB

Environmental	
Device Temperature (operating) *	-30 °C to 85 °C
Sensor Temperature (operating, performance guarantee)	-10 °C to 60 °C
Temperature (storage)	-40 °C to 85 °C
Humidity (operating)	20 % to 80 % (non-condensing)
Humidity (storage)	20 % to 95 % (non-condensing)

*) See section Temperature Measurement Point for details.

2 Electrical Characteristics

2.1 Absolute Maximum Ratings

Item	Symbol	Pins	Min	Max	Unit
Supply voltage	+3V3_D (VCC)	22	-0.3	+5.5	V
I/O voltage	GPIO1 GPIO2	17 18	-0.3	VCC	V
I2C voltage	IC2_SCL I2C_SDA	20 21	-0.5	+3.8	V

2.2 Recommended Operating Conditions

Item	Symbol	Pins	Min	Typ	Max	Unit
Supply voltage	+3V3_D (VCC)	22	+3.1	+3.3	+3.5	V
I/O voltage	GPIO1 GPIO2	17 18	+2.9	+3.3	VCC	V
I2C voltage	IC2_SCL I2C_SDA	20 21	+2.9	+3.3	VCC	V

3 Dimensional Diagrams

3.1 DMM 36SX462-ML Board Camera

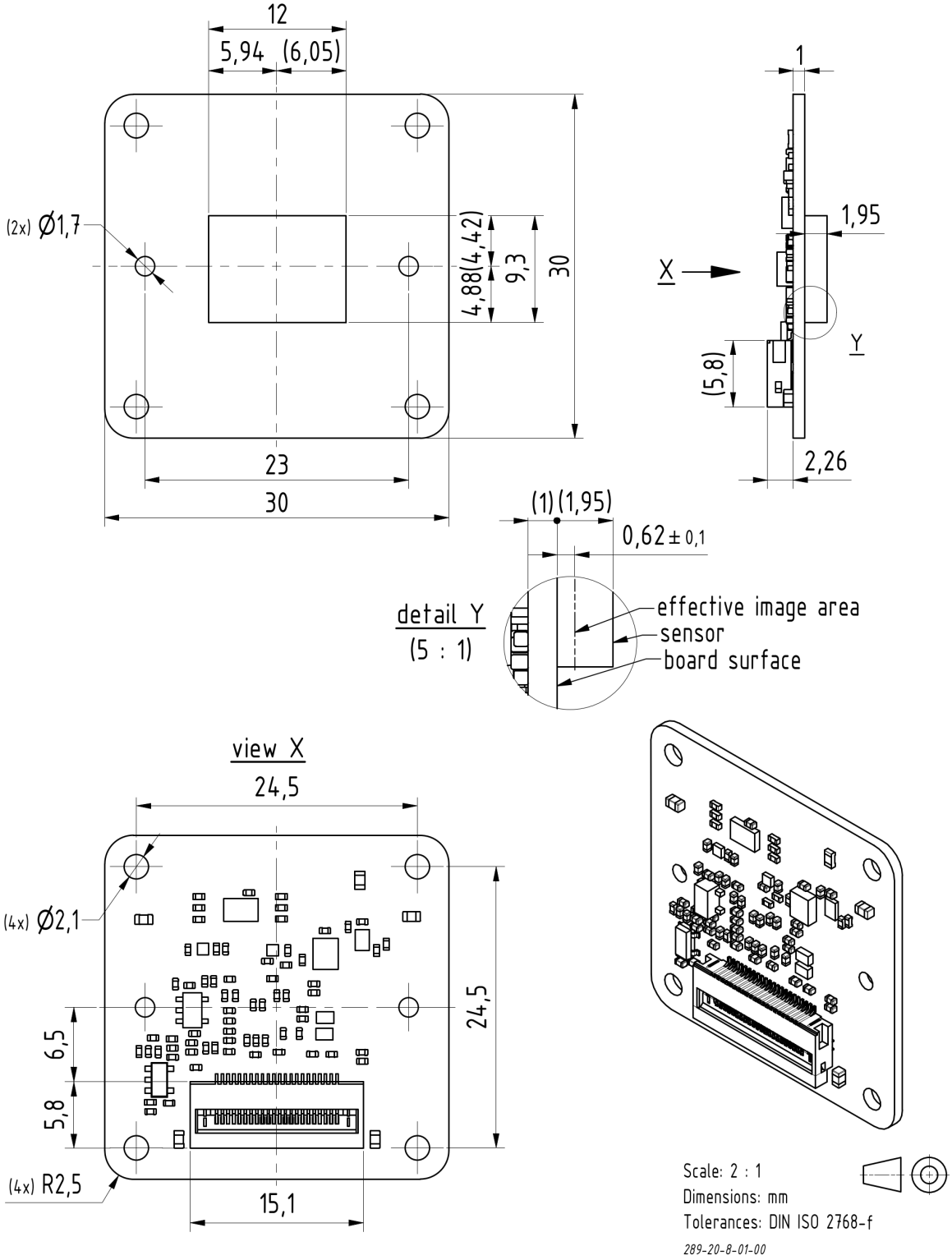

4 Spectral Characteristics

4.1 Spectral Sensitivity - IMX462

Sensor: Sony IMX462LLR-C *courtesy of Sony Deutschland GmbH*

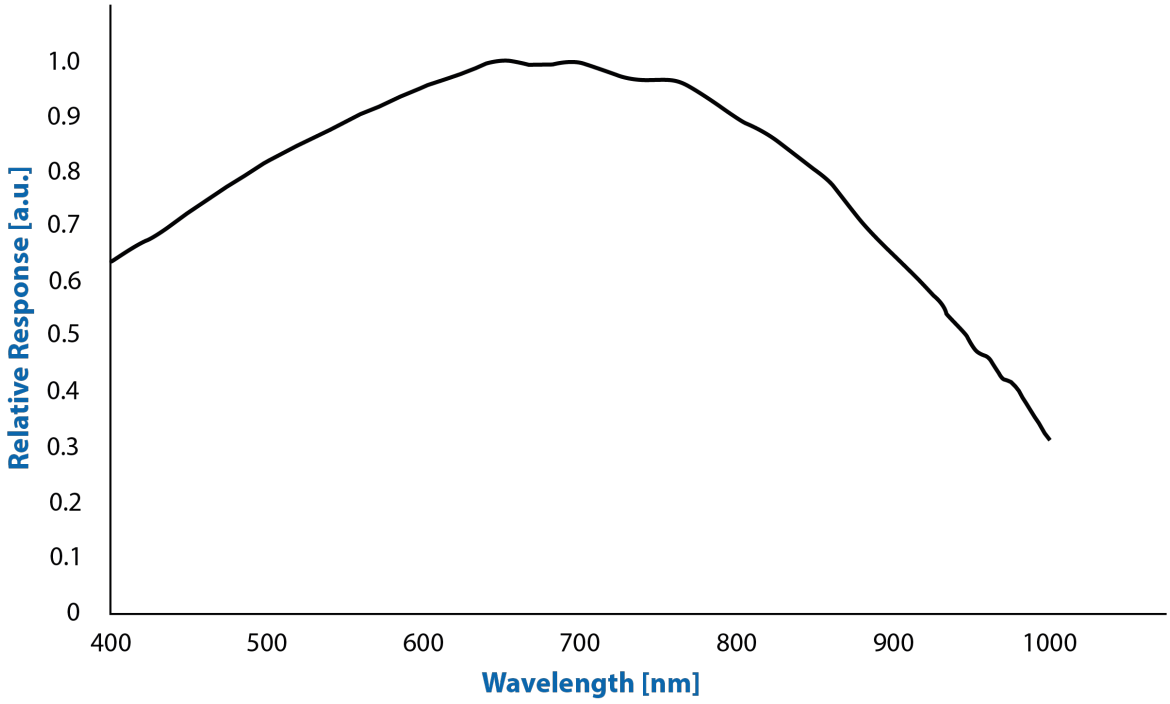

5 22-Pin Camera Connector

The DMM 36SX462-ML sensor board is connected to the system via a 22-pin FFC connector that is compatible to the 22-pin Raspberry Pi MIPI Interface.

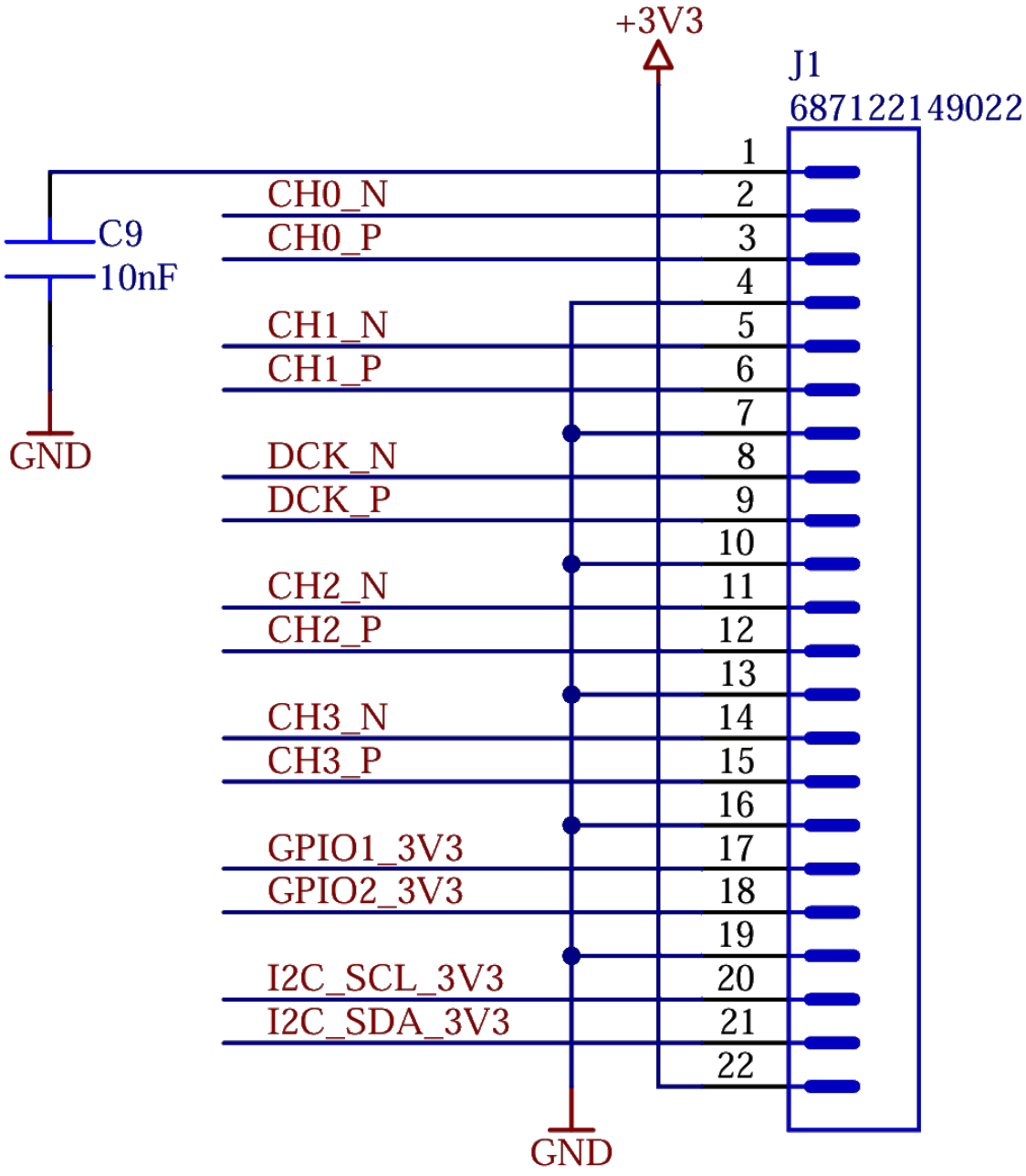

22-Pin Camera Connector

#	Name	Type	Description
1	(GND) capacitive coupled	GND	Ground
2	CH1 N	O	MIPI CSI-2 output
3	CH1 P	O	MIPI CSI-2 output
4	GND	GND	Ground
5	CH2 N	O	MIPI CSI-2 output
6	CH2 P	O	MIPI CSI-2 output
7	GND	GND	Ground
8	DCK N	O	MIPI CSI-2 output
9	DCK P	O	MIPI CSI-2 output
10	GND	GND	Ground
11	CH3 N	O	MIPI CSI-2 output
12	CH3 P	O	MIPI CSI-2 output
13	GND	GND	Ground
14	CH4 N	O	MIPI CSI-2 output
15	CH4 P	O	MIPI CSI-2 output
16	GND	GND	Ground
17	GPIO1_3V3	I/O	Do not use
18	GPIO2_3V3	I/O	Do not use
19	GND	GND	Ground
20	I2C_SCL_3V3	I/O	I2C serial clock
21	I2C_SDA_3V3	I/O	I2C serial data
22	+3V3	PWR	3.3 V (±5%) power supply

All I/Os have the same I/O voltage of 3.3 V. The part number of the FPC connector is Wuerth 687122149022. 22-pin 0.5 mm Pitch.

6 I2C Devices

There are multiple I2C devices on the DMM 36SX462-ML sensor board. The following table describes the parts and their I2C addresses:

Address (7-bit)	Device	Description
0x1A	IMX462	Image Sensor
0x50	AT24C256C	EEPROM

7 Programming the Image Sensor

The data sheet for the IMX462 image sensor is not publicly available.

7.1 Input Clock

The sensor's INCK pin is connected to a clock source with a frequency of 37.5 MHz.

7.2 Power-up Sequence

Delay	Action
-	Supply 3.3V to +3V3_D (VDD)
350 ms	Write sensor registers

7.3 Further Assistance

For more detailed information, register settings and assistance integrating the sensor board into your product, please contact The Imaging Source support.

8 Temperature Measurement Point

Device temperature in operating state is measured on the back side of the circuit board:

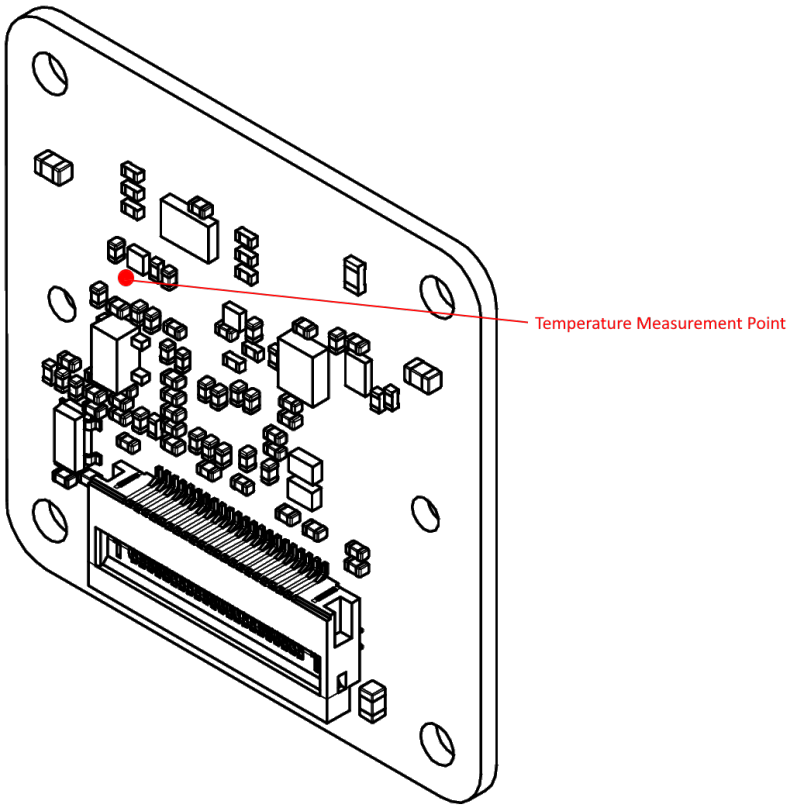

DMM 36SX462-ML

All product and company names in this document may be trademarks and tradenames of their respective owners and are hereby acknowledged.

The Imaging Source Europe GmbH cannot and does not take any responsibility or liability for any information contained in this document. The source code presented in this document is exclusively used for didactic purposes. The Imaging Source does not assume any kind of warranty expressed or implied, resulting from the use of the content of this document or the source code.

The Imaging Source Company reserves the right to make changes in specifications, function or design at any time and without prior notice.

Last update: December 2025
© 2025 The Imaging Source Europe GmbH
All rights reserved. Reprint, also in parts, only allowed with permission of The Imaging Source Europe GmbH.

All weights and dimensions are approximate. Unless otherwise specified, the lenses shown in the context of cameras are not shipped with these cameras.

Headquarters:

The Imaging Source Europe GmbH
Überseetor 18, D-28217 Bremen, Germany
Phone: +49 421 33591-0

North & South America:

The Imaging Source, LLC
Suite 470, 4600 Park Road, Charlotte, NC 28209, United States
Phone: +1 877-462-4772

Asia Pacific:

The Imaging Source Asia Co., Ltd.
3F., No. 43-7/8, Zhongxing Road
Xizhi District, New Taipei City 221012, Taiwan
Phone: +886 2-2792-3153

www.theimagingsource.com