Technical Details

ViC 47GR2020-I67
Technical Reference Manual

THE IMAGINGSOURCE
TECHNOLOGY BASED ON STANDARDS

Table of Contents

1. Quick Facts 5

2. Dimensional Diagrams 7

2.1 ViC 47GR2020-I67 without Tripod Adapter 7

3. I/O Connector 8

3.1 6-Pin I/O Connector 8

4. Spectral Characteristics 9

4.1 Spectral Sensitivity - AR2020 9

5. Camera Controls 10

5.1 Sensor Readout Control 10

5.1.1 Pixel Format 10

5.1.1.1 8-Bit Bayer Raw 10

5.1.1.2 12-Bit Packed Bayer Raw 11

5.1.1.3 16-Bit Bayer Raw 11

5.1.1.4 YUV 4:2:2 11

5.1.1.5 YUV 4:1:1 12

5.1.1.6 8-Bit Monochrome 12

5.1.2 Resolution 12

5.1.3 Readout Modes 13

5.1.4 Frame Rate 14

5.1.5 Partial Scan Offset 16

5.1.6 Image Flipping 17

5.2 Image Sensor Control 17

5.2.1 Exposure Time 17

5.2.2 Gain 18

5.2.3 Black Level 18

5.3 Automatic Exposure and Gain Control 18

5.3.1 Auto Exposure 19

5.3.2 Auto Gain 19

5.3.3 Auto Reference Value 19

5.3.4 Highlight Reduction 20

5.3.5 Auto Exposure Limits 20

5.3.6 Auto Gain Limits 21

5.4 Trigger 22

5.4.1 Trigger Mode 22

5.4.2 Trigger Polarity 22

5.4.3 Trigger Operation 22

5.4.4 Software Trigger 23

5.4.5 Trigger Burst Count 23

5.4.6 Trigger Source 24

5.4.7 Trigger Overlap 24

5.4.8 Trigger Delay 24
5.5 Trigger Timing Parameters 25
5.5.1 Trigger Debounce Time 25
5.5.2 Trigger Mask Time 25
5.5.3 Trigger Noise Suppression Time 25
5.6 Digital I/O 26
5.6.1 Line Selector 26
5.6.2 Line Name 27
5.6.3 Line Mode 27
5.6.4 Line Inverter 27
5.6.5 Line Status 27
5.6.6 Line Status Invalidate 28
5.6.7 Line Source 28
5.6.8 Line Format 28
5.6.9 User Output Selector 29
5.6.10 User Output Value 29
5.7 Strobe 29
5.7.1 Strobe Enable 30
5.7.2 Strobe Polarity 30
5.7.3 Strobe Operation 30
5.8 White Balance 31
5.8.1 Auto White Balance 31
5.8.2 White Balance Mode 31
5.8.3 Manual White Balance 32
5.9 Image Processing 34
5.9.1 Gamma 34
5.9.2 Lookup Table 35
5.10 Color Processing 36
5.10.1 Hue 36
5.10.2 Saturation 36
5.10.3 Color Correction Matrix 37
5.11 Region of Interest for Auto Functions 40
5.11.1 Auto Functions ROI Enable 40
5.11.2 Auto Functions ROI Preset 40
5.11.3 Auto Functions ROI Custom Rectangle 41
5.12 User Sets 42
5.12.1 User Set Selector 42
5.12.2 Load User Set 43
5.12.3 Save User Set 43
5.12.4 Default User Set 43
5.13 Timestamp Control 43
5.13.1 Timestamp Latch 44
5.13.2 Timestamp Latch Value 44

5.13.3 Timestamp Latch String 44
5.13.4 Timestamp Reset 44
5.14 Precision Time Protocol 45
5.14.1 PTP Enable 45
5.14.2 PTP Status 45
5.15 Action Scheduler 46
5.15.1 Action Selector 46
5.15.2 Action Scheduler Time 46
5.15.3 Action Scheduler Interval 47
5.15.4 Action Scheduler Commit 47
5.15.5 Action Scheduler Cancel 47
5.16 Events 48
5.16.1 Event Selector 48
5.16.2 Event Notification 48
5.16.3 Event Frame Trigger Missed 49
5.16.4 Event Line1 Falling Edge 49
5.16.5 Event Line1 Rising Edge 50
5.16.6 Event Test 50
5.17 Bandwidth Control 51
5.17.1 Device Link Throughput Limit Mode 51
5.17.2 Device Link Throughput Limit 51
6. Revision History 53

1 Quick Facts

General	
Vision Standard	GigE Vision
Dynamic Range	10 bit
Resolution	5120x3840
Frame Rate at Full Resolution	6
Pixel Formats	8-Bit Bayer (GR) 12-Bit Bayer Packed (GR) 16-Bit Bayer (GR) YUV 4:2:2 YUV 4:1:1 YUV 4:1:1 8-Bit Monochrome 12-Bit Packed Monochrome 16-Bit Monochrome

Optical Interface	
IR-Cut filter	No
Sensor Type	OnSemi AR2020
Shutter Type	Rolling
Sensor Format	1/1.8 inch
Pixel Size	1.4 µm
Lens Mount	M12x0.5

Electrical Interface	
Interface	GigE
Supply Voltage	4.75 VDC to 14 VDC or PoE: 48 VDC to 56 VDC
Current Consumption (DC)	approx 150 mA @ 12 VDC
Power Consumption (PoE)	approx 2.3 W PoE

Mechanical Data	
Dimensions	H: 43 mm, W: 43 mm, L: 62 mm
Mass	124 g
Protection Class	IP6K6, IP6K7 (ISO 20653) *

*) Protection only applies while an IP67-rated M12 ethernet cable and either an IP67-rated M8 I/O cable or an IP67-rated M8 port protection cap is attached, and the lens tube is tightly secured.

Adjustments	
Shutter	30 µs to 1 s
Gain	0 dB to 47.63 dB

Environmental Conditions	
Housing Temperature (operating)	0 °C to 50 °C
Temperature (storage)	-20 °C to 80 °C
Humidity (operating)	20 % to 80 % (non-condensing)
Humidity (storage)	20 % to 95 % (non-condensing)

2 Dimensional Diagrams

2.1 ViC 47GR2020-I67 without Tripod Adapter

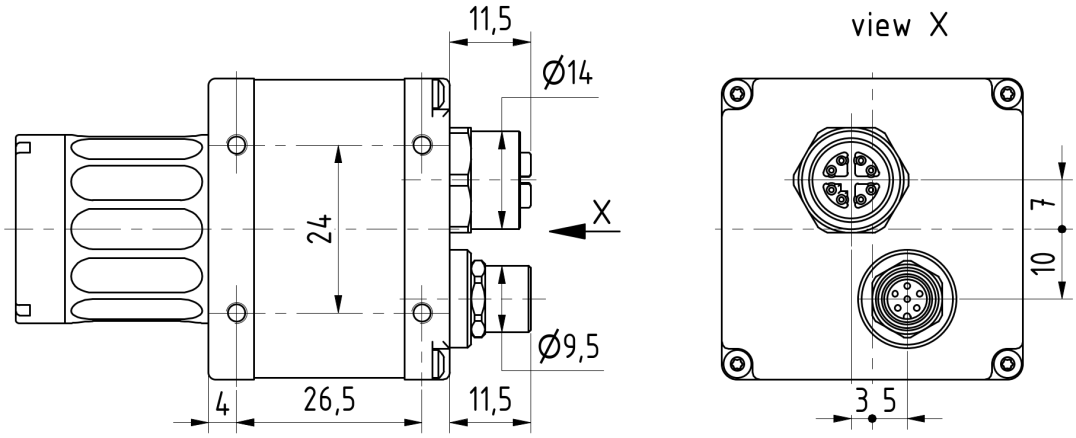

*) available in different lengths

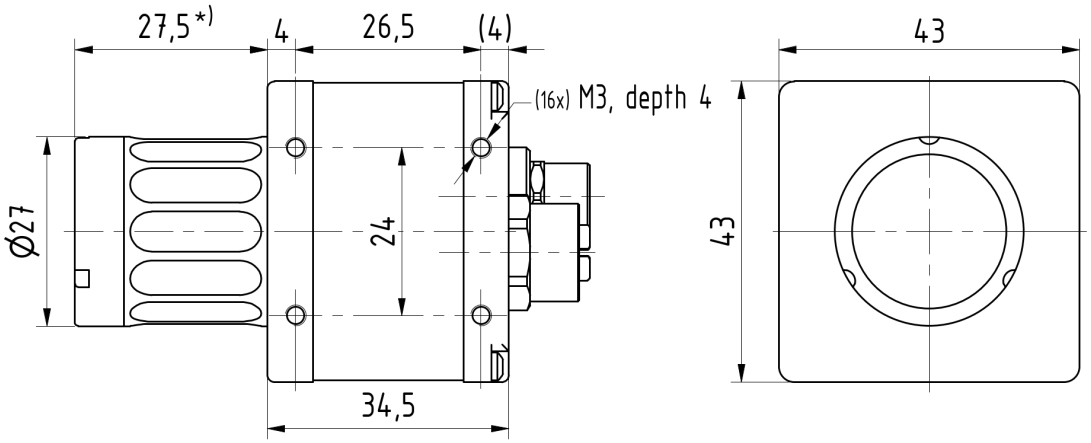

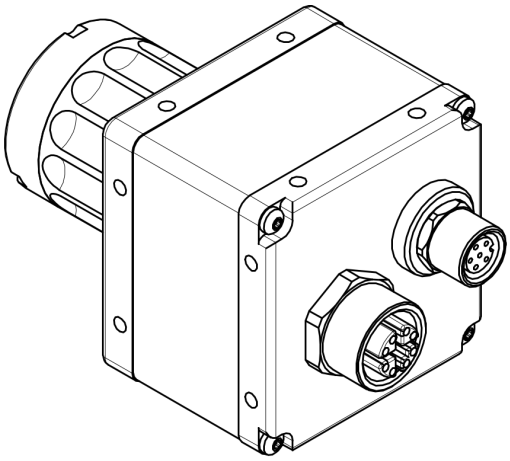

Scale: 1 : 1
Dimensions: mm
Tolerances: DIN ISO 2768-m

317-25-01-02-00-a

3 I/O Connector

3.1 6-Pin I/O Connector

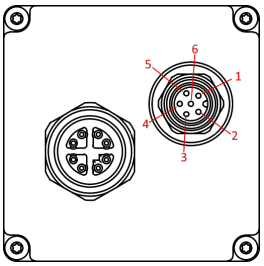

Rear view of camera

Pin	Signal	Type[1]	Remarks	Min	Max	LineSelector[2]
1	VIN	P		4.75 V	14 V	-
2	TRIGGER_IN	I	min 0.15mA @ 3.0V	3.0 V	25 V	Line1
3	GND	G				-
4	GPOUT1	O	Open Drain, max 0.5A		25 V	Line0
5	GPOUT2	O	Open Drain, max 0.5A		25 V	Line2
6	GND	G				-

[1] P: Power, G: Ground, O: Output, I: Input

[2] Set Line Selector to configure or query this pin.

The camera is equipped with an M8 A-coded 6-pin female connector. To create an I/O cable, a matching M8 connector or an M8 cable assembly (e.g. The Imaging Source *CA-GigE/IP67/M8/PWR/Trig/OE/5*) is required.

4 Spectral Characteristics

4.1 Spectral Sensitivity - AR2020

Sensor: onsemi AR2020 *courtesy of onsemi*

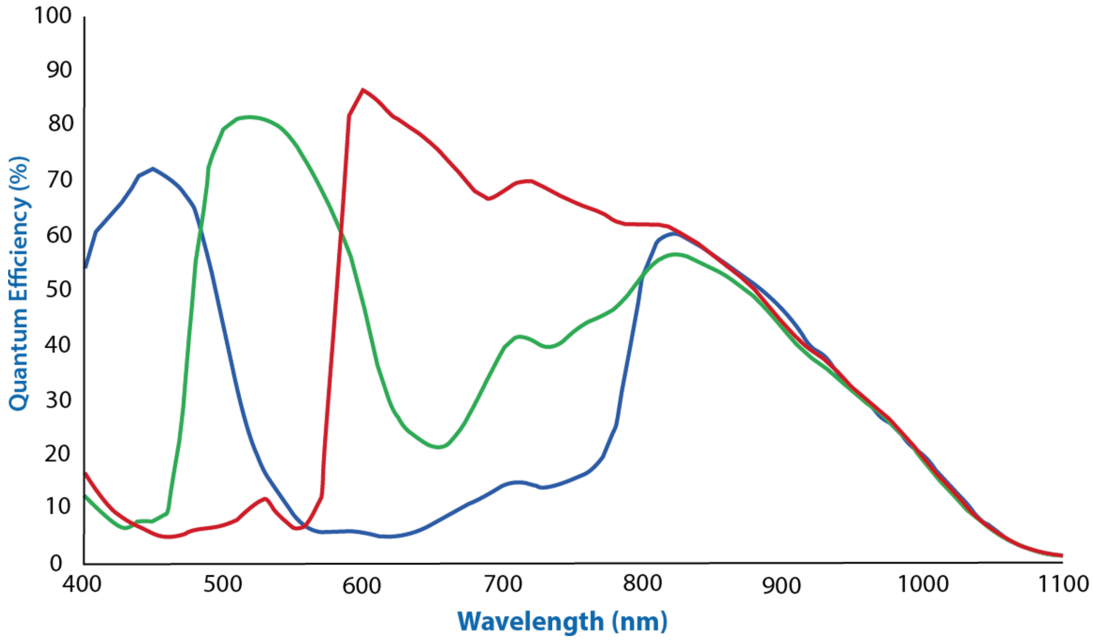

5 Camera Controls

This section describes the parameters available for the ViC 47GR2020-I67 camera.

The actual name of the parameter depends on the driver technology used to access the camera. Parameter names are listed for the most common ways to access the cameras:

- *GigE Vision* (*IC Imaging Control 4*, or via 3rd party driver)
- *IC Imaging Control 3.x* (on Windows, via *Device Driver for The Imaging Source GigE Cameras*)

5.1 Sensor Readout Control

5.1.1 Pixel Format

The pixel format defines the data type of the pixels transmitted to the computer. The bits per pixel needed for a particular pixel format influence the required bandwith.

The driver technology used to access the camera significantly impacts the way the pixel format is controlled:

- When using *IC Imaging Control 4* or *GigE Vision*, the pixel format is controlled through the `PixelFormat` *GenICam* feature.
- When using *IC Imaging Control 3.x*, the pixel format is part of the video format - a parameter which combines pixel format, resolution and readout mode. For more information, refer to the *IC Imaging Control 3.x* documentation sections on `VideoFormat` and `VideoFormatDesc`.

The ViC 47GR2020-I67 color camera supports multiple pixel formats with variable bits-per-pixel settings. The names of the pixel formats and the way to select them depends on the driver used to control the camera. The following table contains a short overview of all possible formats followed by a more detailed description.

Pixel Format	Bits Per Pixel	GigEVision	TIS GigE Driver
8-Bit Bayer (GR)	8	`BayerGR8`	`RGB32, Y800`
12-Bit Packed Bayer (GR)	12	`BayerGR12p`	`RGB64, Y16`
16-Bit Bayer (GR)	16	`BayerGR16`	`RGB64, Y16`
YUV 4:2:2	16	`YUV422_8`	`YUY2`
YUV 4:1:1 (a)	12	`YCbCr411_8`	
YUV 4:1:1 (b)	12	`YCbCr411_8_CbYYCrYY`	`Y411`
8-Bit Monochrome	8	`Mono8`	

5.1.1.1 8-Bit Bayer Raw

This format transmits data using one byte for each pixel.

GigEVision drivers see this pixel format as one of the 8-bit bayer raw formats (`BayerGR8`, `BayerRG8`, `BayerGB8`, `BayerBG8`).

The *Device Driver for The Imaging Source GigE Cameras* simplifies this variety of possible pixel formats and offers two video formats instead: `RGB32` and `Y800`. The `RGB32` format results from the driver's automatic debayering of the raw image data, while the `Y800` format contains the raw data which is reinterpreted as monochrome.

5.1.1.2 12-Bit Packed Bayer Raw

This format transmits data using 3 bytes for each pair of 2 consecutive pixels.

GigEVision drivers see this pixel format as one of the 12-bit packed bayer raw formats (`BayerGR12Packed`, `BayerRG12Packed`, `BayerGB12Packed`, `BayerBG12Packed`).

The *Device Driver for The Imaging Source GigE Cameras* simplifies this variety of possible pixel formats and offers two video formats instead: `RGB64` and `Y16`. The `RGB64` format results from the driver's automatic debayering of the raw image data, while the `Y16` format contains the raw data which is reinterpreted as monochrome. Since the ViC 47GR2020-I67 camera offers both 12-bit packed and 16-bit bayer raw pixel formats, the driver uses the 12-bit packed format when the `RGB64` or `Y16` video format is selected.

5.1.1.3 16-Bit Bayer Raw

This format transmits data using 2 bytes for each pixel.

The sensor of the ViC 47GR2020-I67 camera is not able to provide 16-bit data output. The pixel data is transmitted in the most significant bits. This allows application programs to ignore the sensor-specific data type and to treat the data as if the sensor outputs 16 bits.

GigEVision drivers see this pixel format as one of the 16-bit packed bayer raw formats (`BayerGR16`, `BayerRG16`, `BayerGB16`, `BayerBG16`).

The *Device Driver for The Imaging Source GigE Cameras* simplifies this variety of possible pixel formats and offers two video formats instead: `RGB64` and `Y16`. The `RGB64` format results from the driver's automatic debayering the raw image data, while the `Y16` format contains the raw data which is reinterpreted as monochrome.

5.1.1.4 YUV 4:2:2

This format transmits an 8-bit luminance value for every pixel and a pair of chrominance values for every two pixels.

The camera converts the raw pixel data from the sensor to YUV 4:2:2. Since YUV 4:2:2 averages to 2 bytes per pixel, the YUV 4:2:2 pixel format requires two times the bandwidth of the 8-bit raw format, thus reducing the maximum possible frame rate.

GigEVision drivers see this pixel format as `YUV422_8`.

The *Device Driver for The Imaging Source GigE Cameras* offers this pixel format as the `YUY2` video format.

5.1.1.5 YUV 4:1:1

This format transmits an 8-bit luminance value for every pixel and a pair of chrominance values for every four pixels.

The two YUV 4:1:1 pixel formats only differ in their byte order.

The camera converts the raw pixel data from the sensor to YUV 4:2:2. Since YUV 4:2:2 averages to 1.5 bytes per pixel, the YUV 4:2:2 pixel format requires two 50% more bandwidth than the 8-bit raw format, thus reducing the maximum possible frame rate.

GigEVision drivers see this pixel format as `YCbCr411_8` and `YCbCr411_8_CbYYCrYY`.

The *Device Driver for The Imaging Source GigE Cameras* offers this pixel format as the `Y411` video format.

5.1.1.6 8-Bit Monochrome

The camera generates the pixel data by debayering the raw pixel data and transmitting only the luminance information.

GigEVision drivers enumerate this pixel format as `Mono8`.

5.1.2 Resolution

The ViC 47GR2020-I67 allows the user to specify which rectangular region of the image sensor to read out during camera operation. The size of this rectangle determines the number of pixels that have to be transferred for each frame and has a significant influence on the required network bandwidth.

Lowering the resolution also often allows the image sensor to operate at a higher frame rate. Changes in the vertical resolution have more effect on the maximum frame rate than changes in the horizontal direction.

The way the resolution is controlled varies greatly between the driver technology used to access the camera:

- When using *GigE Vision*, the resolution is controlled through the GenICam features Width and Height.
- When using *IC Imaging Control*, the resolution is part of the video format, a parameter that combines pixel format, resolution and readout mode. For more information, refer to the *IC Imaging Control* documentation sections on `VideoFormat` and `VideoFormatDesc`.

Parameter	Horizontal Resolution
Minimum	256
Maximum	5120
Increment	16
GigEVision: GenICam	`Width`
Type	Integer

Parameter	Vertical Resolution
Minimum	4
Maximum	3840
Increment	4
GigEVision: GenICam	`Height`
Type	Integer

5.1.3 Readout Modes

The ViC 47GR2020-I67 camera offers different sensor readout modes.

By default, the camera outputs all pixels of the image sensor.

In *binning* modes, a number of neighboring pixels is merged into one output pixel during readout. The nature of this merge operation is sensor-specific, most sensors either add the pixel values or average them.

The way the readout modes are controlled depends greatly upon which driver technology is used to access the camera:

- When using *GigE Vision*, the readout mode is controlled through the *GenICam* features `DecimationHorizontal`, `DecimationVertical`, `BinningHorizontal` and `BinningVertical`.
- When using *IC Imaging Control*, the readout mode is part of the video format - a parameter that which combines pixel format, resolution and readout mode. For more information, refer to the *IC Imaging Control* documentation sections on `VideoFormat` and `VideoFormatDesc`.

The following readout modes are supported:

- Default
- Binning 2X
- Binning 4X

Parameter	Binning Horizontal
Valid Values	1, 2, 4
GigEVision: GenICam	`BinningHorizontal`
Type	Integer

Parameter	Binning Vertical
Valid Values	1, 2, 4
GigEVision: GenICam	`BinningVertical`
Type	Integer

5.1.4 Frame Rate

The frame rate is specified in frames per second and determines the camera's operating speed.

The way the frame rate is controlled depends greatly upon which driver technology is used to access the camera:

- When using *GigEVision*, the frame rate is controlled through the *GenICam* feature `AcquisitionFrameRate`.
- When using IC Imaging Control, the frame rate is selected from a list of available frame rates through APIs such as `Grabber::setFPS` or `ICImagingControl.DeviceFrameRate`.

The range of available frame rates depends upon other camera settings such as well, pixel format, resolution and readout modes.

Parameter	Frame Rate
Minimum	Depending on Pixel Format, Resolution, and Readout Mode
Maximum	Depending on Pixel Format, Resolution, and Readout Mode
GigEVision: GenICam	`AcquisitionFrameRate`
Type	Float

Please note: Enabling Device Link Throughput Limit Mode can limit the frame rate below the configured value.

The following tables show the maximum frame rate for some combinations of pixel format and resolution.

8-Bit Bayer Raw

Width	Height	Maximum Frame Rate
5120	3840	6
1920	1080	56
640	480	356

12-Bit Packed Bayer Raw

Width	Height	Maximum Frame Rate
5120	3840	4
1920	1080	37
640	480	244

16-Bit Bayer Raw

Width	Height	Maximum Frame Rate
5120	3840	3
1920	1080	28
640	480	185

YUV 4:2:2

Width	Height	Maximum Frame Rate
5120	3840	3
1920	1080	28
640	480	185

YUV 4:1:1 (a)

Width	Height	Maximum Frame Rate
5120	3840	4
1920	1080	37
640	480	244

YUV 4:1:1 (b)

Width	Height	Maximum Frame Rate
5120	3840	4
1920	1080	37
640	480	244

8-Bit Monochrome

Width	Height	Maximum Frame Rate
5120	3840	6
1920	1080	56
640	480	356

5.1.5 Partial Scan Offset

If the selected resolution is smaller than the sensor size, the part of the sensor that is actually read out can be specified by the *Partial Scan Offset X* and *Partial Scan Offset Y* parameters. By default, the camera automatically positions the offsets so that the center of the sensor is used.

Parameter	Partial Scan Offset X
Minimum	0
Maximum	4864
Increment	4
GigEVision: GenICam	`OffsetX`
Type	Integer
VCD Property	`VCDID_PartialScanOffset` `\VCDElement_PartialScanOffsetX`

Parameter	Partial Scan Offset Y
Minimum	0
Maximum	3836
Increment	4
GigEVision: GenICam	`OffsetY`
Type	Integer
VCD Property	`VCDID_PartialScanOffset` `\VCDElement_PartialScanOffsetY`

If *Partial Scan Offset X* or *Partial Scan Offset Y* is configured to a value that would be invalid with the current setting of Resolution setting, the camera uses the maximum possible value.

Parameter	Partial Scan Auto Center
`On`	Automatically configure Partial Scan Offset X/Y so that the center area of the sensor is read out
`True`	
`Off`	Control Partial Scan Offset X/Y manually
`False`	
GigEVision: GenICam	`OffsetAutoCenter`
Type	Boolean
VCD Property	`VCDID_PartialScanOffset \VCDElement_PartialScanAutoCenter`

5.1.6 Image Flipping

The ViC 47GR2020-I67 camera allows flipping of the image data horizontally, vertically, or both. The *Flip Horizontal* and *Flip Vertical* parameters can be used to control this sensor feature.

Parameter	Flip Horizontal
`True`	Image data is flipped horizontally
`False`	Image data is not flipped horizontally
GigEVision: GenICam	`ReverseX`
Type	Boolean
VCD Property	`VCDID_FlipHorizontal\VCDElement_Value`

Parameter	Flip Vertical
`True`	Image data is flipped vertically
`False`	Image data is not flipped vertically
GigEVision: GenICam	`ReverseY`
Type	Boolean
VCD Property	`VCDID_FlipVertical\VCDElement_Value`

5.2 Image Sensor Control

5.2.1 Exposure Time

The *Exposure Time* parameter defines the time the camera opens its (electronic) shutter when it is taking an image.

Parameter	Exposure Time
Minimum	30 µs
Maximum	1 s
Default	auto
GigEVision: GenICam	`ExposureTime`
Type	Float
VCD Property	`VCDID_Exposure\VCDElement_Value`

5.2.2 Gain

The *Gain* parameter defines the amplification that is applied to the image at sensor level.

Parameter	Gain
Minimum	0 dB
Maximum	47.63 dB
Default	auto
GigEVision: GenICam	`Gain`
Type	Float
VCD Property	`VCDID_Gain\VCDElement_Value`

5.2.3 Black Level

The *Black Level* parameter defines the lowest possibly intensity value of the image sensor.

Parameter	Black Level
Minimum	0
Maximum	1023
Default	0
GigEVision: GenICam	`BlackLevel`
Type	Float
VCD Property	`VCDID_Brightness\VCDElement_Value`

5.3 Automatic Exposure and Gain Control

The ViC 47GR2020-I67 camera can automatically control gain and exposure time. These automatic functions are enabled by default.

In order to optimize image parameters, a region of interest can be specified for automatic functions. Specifying a region of interest enables fine-grained control over the image area for which the image parameters are optimized. A selection of pre-defined area presets is available, but the user can also specify the coordinates of a custom rectangle.

In certain situations, it is desirable to limit the range of the auto-controlled parameters. For example, one might want to avoid high gain settings in order to keep noise levels low. Other applications require limiting the maximum exposure time so that movements do not get blurred. Therefore, the ranges of the gain and exposure parameter can be limited.

If both auto exposure and auto gain are active, the camera tries to lower the gain value in order to reduce noise and improve the image quality.

5.3.1 Auto Exposure

Parameter	Auto Exposure
`Continuous`	Enable Auto Exposure
`True`	
`Off`	Disable Auto Exposure
`False`	
GigEVision: GenICam	`ExposureAuto`
Type	Enumeration
VCD Property	`VCDID_Exposure\VCDElement_Auto`

5.3.2 Auto Gain

Parameter	Auto Gain
`Continuous`	Enable Auto Gain
`True`	
`Off`	Disable Auto Gain
`False`	
GigEVision: GenICam	`GainAuto`
Type	Enumeration
VCD Property	`VCDID_Gain\VCDElement_Auto`

5.3.3 Auto Reference Value

The *Auto Reference Value* parameter specifies the target brightness for both auto exposure and auto gain.

Parameter	Auto Reference Value
Minimum	0
Maximum	255
Default	96
GigEVision: GenICam	`ExposureAutoReference`
Type	Integer
VCD Property	`VCDID_Exposure\VCDElement_AutoReference`

5.3.4 Highlight Reduction

Enabling *Highlight Reduction* lets the auto exposure and auto gain functions reduce overexposed areas in the output image. This feature is particularly useful when using 10/12/16-bit output images and a tone mapping algorithm in post-processing when using higher bit depths as the dark areas still contain a lot of useful information.

Parameter	Highlight Reduction
`True`	Try to reduce overexposed areas
`False`	Ignore overexposed areas and focus on matching the image brightness to the selected Auto Reference Value.
GigEVision: GenICam	`ExposureAutoHighlightReduction`
Type	Boolean
VCD Property	`VCDID_HighlightReduction\VCDElement_Value`

5.3.5 Auto Exposure Limits

The *Auto Exposure Lower Limit* parameter determines the minimum possible value that can be set by the auto exposure algorithm.

Parameter	Auto Exposure Lower Limit
Minimum	30 µs
Maximum	1 s
GigEVision: GenICam	`ExposureAutoLowerLimit`
Type	Float

The *Auto Exposure Upper Limit* parameter determines the maximum possible value that can be set by the auto exposure algorithm.

Parameter	Auto Exposure Upper Limit
Minimum	30 µs
Maximum	1 s
GigEVision: GenICam	`ExposureAutoUpperLimit`
Type	Float
VCD Property	`VCDID_Exposure\VCDElement_AutoMaxValue`

If the *Auto Exposure Upper Limit Auto* parameter is enabled, the value of *Auto Exposure Upper Limit* is automatically kept at the maximum possible value for the current frame rate.

Parameter	Auto Exposure Upper Limit Auto
`On`	Select *Auto Exposure Upper Limit* automatically
`Off`	Let the user control *Auto Exposure Upper Limit*
GigEVision: GenICam	`ExposureAutoUpperLimitAuto`
Type	Enumeration
VCD Property	`VCDID_Exposure\VCDElement_AutoMaxValueAuto`

5.3.6 Auto Gain Limits

The *Auto Gain Lower Limit* parameter determines the minimum possible value that can be set by the auto gain algorithm.

Parameter	Auto Gain Lower Limit
Minimum	0 dB
Maximum	47.63 dB
GigEVision: GenICam	`GainAutoLowerLimit`
Type	Float

The *Auto Gain Upper Limit* parameter determines the maximum possible value that can be set by the auto gain algorithm.

Parameter	Auto Gain Upper Limit
Minimum	0 dB
Maximum	47.63 dB
GigEVision: GenICam	`GainAutoUpperLimit`
Type	Float

5.4 Trigger

The trigger mode can be used to take images at very specific points in time which are specified by an electrical signal connected to the TRIGGER_IN pin of the I/O connector of the camera.

5.4.1 Trigger Mode

The *Trigger Mode* parameter enables the trigger mode.

Parameter	Trigger Mode
`On`	Enable Trigger Mode
`True`	
`Off`	Disable Trigger Mode
`False`	
GigEVision: GenICam	`TriggerMode`
Type	Enumeration
VCD Property	`VCDID_Trigger\VCDElement_Value`

5.4.2 Trigger Polarity

The *Trigger Polarity* parameter controls whether a trigger event is accepted on the rising or falling edge of the signal connected to the TRIGGER_IN line.

Parameter	Trigger Polarity
`RisingEdge`	Accept rising edge as trigger signal
`True`	
`FallingEdge`	Accept falling edge as trigger signal
`False`	
GigEVision: GenICam	`TriggerActivation`
Type	Enumeration
VCD Property	`VCDID_Trigger\VCDElement_Polarity`

5.4.3 Trigger Operation

The *Trigger Operation* parameter controls the operation mode of the sensor in trigger mode.

Rolling shutter sensors can use the *Global Reset Release* mode when being triggered. In this mode, the integration time starts simultaneously for all lines. At the end of the nominal exposure time, the sensor then stops integrating and starts reading out the lines - as it is

typical for a rolling shutter. Therefore, every line has a slightly longer actual exposure time than the line above it.

Parameter	Trigger Operation
`Default`	Default mode
`GlobalResetRelease`	Use Global Reset Release mode
GigEVision: GenICam	`TriggerOperation`
Type	Enumeration
VCD Property	`VCDID_Trigger\VCDElement_TriggerOperation`

5.4.4 Software Trigger

The *Software Trigger* function can be used to simulate a trigger pulse, in turn causing one image to be exposed and delivered to the host computer.

Parameter	Software Trigger
Execute	Simulate one trigger pulse
GigEVision: GenICam	`TriggerSoftware`
Type	Command
VCD Property	`VCDID_Trigger\VCDElement_SoftwareTrigger`

5.4.5 Trigger Burst Count

The *Trigger Burst Count* parameter allows the camera to be configured to take more than one image per trigger pulse. By default, this parameter is set to 1 so that exactly one image is acquired. The images are taken as rapidly as possible given current settings (i.e. as limited by the current exposure time and frame rate settings).

Parameter	Trigger Burst Count
Minimum	1
Maximum	65535
Default	1
GigEVision: GenICam	`AcquisitionBurstFrameCount`
Type	Integer
VCD Property	`VCDID_Trigger\VCDElement_TriggerBurstCount`

5.4.6 Trigger Source

The *Trigger Source* parameter allows the camera to be configured to only accept trigger signals from a specified source, e.g. only software trigger.

Parameter	Trigger Source
`Any`	Allow trigger signals from any source
`Line1`	Allow only hardware trigger
`Software`	Allow only software trigger
GigEVision: GenICam	`TriggerSource`
Type	Enumeration

5.4.7 Trigger Overlap

The *Trigger Overlap* feature gives information on when a new trigger pulse is accepted in the trigger -> exposure -> readout sequence.

Parameter	Trigger Overlap
`Off`	The next trigger pulse is only accepted once the previous frame has been read out from the sensor
`Readout`	The next trigger pulse is accepted during readout as long as the remaining readout time is shorter than the exposure time
GigEVision: GenICam	`TriggerOverlap`
Type	Enumeration
VCD Property	`VCDID_Trigger\VCDElement_TriggerOverlap`

5.4.8 Trigger Delay

The *Trigger Delay* parameter specifies a time for which the camera waits between receiving a trigger signal and starting the exposure of an image. Simulated trigger pulses generated through the *Software Trigger* function are not delayed by this parameter.

Parameter	Trigger Delay
Minimum	0 s
Maximum	1 s
GigEVision: GenICam	`TriggerDelay`
Type	Float
VCD Property	`VCDID_Trigger\VCDElement_TriggerDelay`

5.5 Trigger Timing Parameters

The Visus IP67 series offers several options for dealing with bad trigger signals. By using the *Debounce Time*, *Denoise Time* and *Mask Time* parameters, the camera can be configured to ignore pulses on its TRIGGER_IN line under certain conditions.

Useful values for these parameters are application-specific. They depend on the expected trigger frequency, the exposure time and assumptions about the input signal quality.

The default values for all these parameters is 0 µs, assuming perfect signal quality.

5.5.1 Trigger Debounce Time

The *Trigger Debounce Time* parameter specifies the time for which the trigger input has to be low in order for the next trigger signal to be accepted.

Parameter	Trigger Debounce Time
Minimum	0 s
Maximum	1 s
Default	0 s
GigEVision: GenICam	`TriggerDebouncer`
Type	Float
VCD Property	`VCDID_Trigger\VCDElement_TriggerDebouncer`

5.5.2 Trigger Mask Time

The *Trigger Mask Time* parameter specifies the time for which trigger pulses are ignored after accepting a trigger signal.

Parameter	Trigger Mask Time
Minimum	0 s
Maximum	1 s
Default	0 s
GigEVision: GenICam	`TriggerMask`
Type	Float
VCD Property	`VCDID_Trigger\VCDElement_TriggerMask`

5.5.3 Trigger Noise Suppression Time

The *Trigger Noise Suppression Time* parameter specifies the time for which trigger input has to be active in order to be accepted as a trigger signal.

Parameter	Trigger Noise Suppression Time
Minimum	0 s
Maximum	1 s
Default	0 s
GigEVision: GenICam	`TriggerDenoise`
Type	Float
VCD Property	`VCDID_Trigger\VCDElement_TriggerDenoise`

5.6 Digital I/O

Visus IP67 series cameras have one digital input and two digital outputs. The digital input can be used as a Trigger input, and the current status can also examined directly.

The digital outputs can be configured as a Strobe output to signal the exact moment when the image sensor is sensitive to light so that external light sources can be synchronized to its operation cycle.

See I/O Connector for a description of the electric properties of the I/O connector.

5.6.1 Line Selector

The *Line Selector* feature selects the physical line (or pin) of the external device connector to configure.

Parameter	Line Selector
`Line0`	Select Line 0
`Line1`	Select Line 1
`Line2`	Select Line 2
GigEVision: GenICam	`LineSelector`
Type	Enumeration

If a line is selected, all other Line* features will be applied to its associated device pin:

- Line Name
- Line Mode
- Line Inverter
- Line Status
- Line Status Invalidate
- Line Source
- Line Format

5.6.2 Line Name

Line Name returns the name of the line selected by Line Selector.

Parameter	Line Name
GigEVision: GenICam	`LineName`
Type	String

5.6.3 Line Mode

Line Mode is a feature indicating the direction of the line selected by Line Selector.

Parameter	Line Mode
`Input`	The selected line is an input.
`Output`	The selected line is an output.
GigEVision: GenICam	`LineMode`
Type	Enumeration

5.6.4 Line Inverter

The *Line Inverter* feature can be used to invert the output signal of the line selected by Line Selector.

Line Inverter is only available if the Line Mode of the selected line is set to *Output*.

Parameter	Line Inverter
`False`	The line signal is not inverted.
`True`	The line signal is inverted.
GigEVision: GenICam	`LineInverter`
Type	Boolean

5.6.5 Line Status

The *Line Status* feature returns the current status of the line selected by Line Selector.

The status of the signal is taken after the signal was possible inverted by Line Inverter.

Line Status is only available if the Line Mode of the selected line is set to *Input*.

Parameter	Line Status
`True`	The level of the line signal is High.
`False`	The level of the line signal is Low.
GigEVision: GenICam	`LineStatus`
Type	Boolean

5.6.6 Line Status Invalidate

Line Status Invalidate invalidates the value of Line Status, causing it to be re-read from the device.

Parameter	Line Status Invalidate
Execute	Invalidates the value of *LineStatus*.
GigEVision: GenICam	`LineStatusInvalidate`
Type	Command

5.6.7 Line Source

Line Source selects which internal I/O source signal is output on the line selected by Line Selector.

The *Line Source* feature is only available if the Line Mode of the selected line is set to *Output*.

Parameter	Line Source
`UserOutput0`	The line outputs the User Output Bit 0 state as defined by User Output Value.
`UserOutput1`	The line outputs the User Output Bit 1 state as defined by User Output Value.
`UserOutput2`	The line outputs the User Output Bit 2 state as defined by User Output Value.
`ExposureActive`	Device is doing exposure of a frame.
GigEVision: GenICam	`LineSource`
Type	Enumeration

5.6.8 Line Format

Line Format indicates the electrical format of the selected line selected by Line Selector.

Parameter	Line Format
`TTL`	The Line is currently accepting or sending TTL level signals.
`OptoCoupled`	The Line is opto-coupled.
`OpenDrain`	The Line is Open Drain.
GigEVision: GenICam	`LineFormat`
Type	Enumeration

5.6.9 User Output Selector

User Output Selector selects which bit of the user output register will be set by User Output Value.

The bits in the user output register can be selected as source signal in Line Source.

Parameter	User Output Selector
`UserOutput0`	Selects bit 0 of the user output register.
`UserOutput1`	Selects bit 1 of the user output register.
`UserOutput2`	Selects bit 2 of the user output register.
GigEVision: GenICam	`UserOutputSelector`
Type	Enumeration

5.6.10 User Output Value

The *User Output Value* feature sets the value of the bit selected by User Output Selector.

The bits in the user output register can be selected as source signal in Line Source.

Parameter	User Output Value
`False`	Set the bit to 0.
`True`	Set the bit to 1.
GigEVision: GenICam	`UserOutputValue`
Type	Boolean

5.7 Strobe

The strobe function controls the automatic generation of output pulses on the STROBE_OUT pin which is synchronized to the image sensor's exposure time.

5.7.1 Strobe Enable

The *Strobe Enable* parameter enables the automatic generation of strobe pulses.

Parameter	Strobe Enable
`On`	Strobe enabled
`True`	
`Off`	Strobe disabled
`False`	
GigEVision: GenICam	`StrobeEnable`
Type	Enumeration
VCD Property	`VCDID_Strobe\VCDElement_Value`

5.7.2 Strobe Polarity

The *Strobe Polarity* parameter can be used to invert the strobe pulse output.

Parameter	Strobe Polarity
`ActiveHigh`	The STROBE_OUT pin is logically high during the exposure time
`True`	
`ActiveLow`	The STROBE_OUT pin is logically low during the exposure time
`False`	
GigEVision: GenICam	`StrobePolarity`
Type	Enumeration
VCD Property	`VCDID_Strobe\VCDElement_StrobePolarity`

5.7.3 Strobe Operation

The *Strobe Operation* parameter specifies how the length of the strobe pulses are controlled.

Parameter	Strobe Operation
`Exposure`	Output pulse duration is equal to the current exposure time
`True`	
GigEVision: GenICam	`StrobeOperation`
Type	Enumeration
VCD Property	`VCDID_Strobe\VCDElement_StrobeMode`

5.8 White Balance

The ViC 47GR2020-I67 color camera can perform white balance by digital multiplication of the appropriate raw pixel values.

5.8.1 Auto White Balance

ViC 47GR2020-I67 can perform *Auto White Balance*. It can be enabled continuously when changes in lighting conditions are expected. Under controlled lighting conditions, however, one-time white balance calibration is the recommended approach.

To perform one-time white balance calibration, place a reference white sheet in front of the camera and set `BalanceWhiteAuto` to *Once*. The camera will then find the correct white balance settings for the current light conditions and keep them active until instructed otherwise.

Parameter	**Auto White Balance**
`Continuous`	Enable automatic white balance
`True`	
`Once`	Enable automatic white balance until the color channels have been balanced once
`One Push`	
`Off`	Disable automatic white balance
`False`	
GigEVision: GenICam	`BalanceWhiteAuto`
Type	Enumeration
VCD Property	`VCDID_WhiteBalance\VCDElement_Auto` `VCDID_WhiteBalance\VCDElement_OnePush`

5.8.2 White Balance Mode

The default auto white balance algorithm is *Gray World*. It is selected by setting the *White Balance Mode* accordingly. The *Gray World* algorithm operates under the assumption that the average color of a scene is near gray and adjusts the white balance coefficients so the average color of the resulting image is gray as well. In the case where this assumption is wrong (e.g. the camera is pointing at a blue carpet), the auto white balance algorithm will select coefficients that do not result in a visually accurate image.

To avoid the problems posed by the *Gray World* algorithm, the *Temperature* mode can be used. This mode operates by trying to determine the color temperature of the light source.

Parameter	White Balance Mode
`Gray World`	Use the *Gray World* model
`Temperature`	Use the *Temperature* model
GigEVision: GenICam	`BalanceWhiteMode`
Type	Enumeration
VCD Property	`VCDID_WhiteBalance \VCDElement_WhiteBalanceMode`

To assist the automatic white balance temperature detection, *White Balance Auto Preset* can be used to limit the range of valid color temperatures.

Parameter	White Balance Auto Preset
`Any`	Allow any color temperature
`Auto Warm White`	Limit color temperature to approximately 2500-4000 K
`Auto Cool White`	Limit color temperature to approximately 4000-5800 K
`Auto Daylight`	Limit color temperature to approximately 5700-7500 K
`Auto Deep Shade`	Limit color temperature to approximately 7500-10000 K
GigEVision: GenICam	`BalanceWhiteAutoPreset`
Type	Enumeration
VCD Property	`VCDID_WhiteBalance \VCDElement_WhiteBalanceAutoPreset`

5.8.3 Manual White Balance

If *Auto White Balance* is not enabled, the amplifiers for the red, green and blue channels can be controlled manually.

Parameter	White Balance Red
Minimum	0
Maximum	3.984375
Default	auto
GigEVision: GenICam	`BalanceRatio[BalanceRatioSelector=Red]`
Type	Float
VCD Property	`VCDID_WhiteBalance \VCDElement_WhiteBalanceRed`

Parameter	White Balance Green
Minimum	0
Maximum	3.984375
Default	auto
GigEVision: GenICam	`BalanceRatio[BalanceRatioSelector=Green]`
Type	Float
VCD Property	`VCDID_WhiteBalance \VCDElement_WhiteBalanceGreen`

Parameter	White Balance Blue
Minimum	0
Maximum	3.984375
Default	auto
GigEVision: GenICam	`BalanceRatio[BalanceRatioSelector=Blue]`
VCD Property	`VCDID_WhiteBalance \VCDElement_WhiteBalanceBlue`

If *White Balance Mode* is set to *Temperature*, the color temperature can be set directly. Additionally, a light source can be selected from a list of presets.

Parameter	White Balance Temperature
Minimum	2500 K
Maximum	10000 K
Default	auto
Increment	100
GigEVision: GenICam	`BalanceWhiteTemperature`
Type	Integer
VCD Property	`VCDID_WhiteBalance \VCDElement_WhiteBalanceTemperature`

Parameter	White Balance Temperature Preset
Sodium-Vapor Lamp	2500 K
Warm Light	2700 K
Halogen Light	3000 K
Neutral White	3500 K
Cool White Fluorescent Light	4000 K
Cool White/Daylight (CFL)	5000 K
Daylight	6000 K
Cool White LED	7500 K
Blue Sky	10000 K
GigEVision: GenICam	BalanceWhiteTemperaturePreset
Type	Enumeration
VCD Property	VCDID_WhiteBalance \VCDElement_TemperaturePreset

5.9 Image Processing

5.9.1 Gamma

Visus IP67 series cameras can perform gamma correction on the image data. If the pixel format of a color camera is set a YUV mode, gamma correction is applied to the Y channel. In bayer raw and RGB24 modes, all color channels are subject to the same gamma correction.

Parameter	Gamma
Minimum	0.1
Maximum	5
Default	0.55
GigEVision: GenICam	Gamma
Type	Float
VCD Property	VCDID_Gamma\VCDElement_Value

5.9.2 Lookup Table

The Visus IP67 series allows the user to specify a lookup table (LUT) that can transform pixel values. This lookup table can be used to perform tasks like histogram equalization inside the camera.

If the pixel format of a color camera is set to one of the YUV modes, the lookup table is applied only to the Y channel. In bayer raw and RGB24 modes, all color channels are subject to the same lookup operation.

The lookup table has 257 16-bit entries. The upper 8 bits of the image data are used to select the appropriate entry in the lookup table, while the remaining bits are used to interpolate between the selected entry and one of its neighbors.

The *LUT Enable* feature enables the lookup table.

Parameter	**LUT Enable**
`True`	Enable lookup table operation
`False`	Disable lookup table operation
GigEVision: GenICam	`LUTEnable`
Type	Boolean

The lookup table values can be programmed using the *LUT Index* and *LUT Value* features.

Parameter	**LUT Index**
Minimum	0
Maximum	256
GigEVision: GenICam	`LUTIndex`
Type	Integer

Parameter	**LUT Value**
Minimum	0
Maximum	65535
GigEVision: GenICam	`LUTValue`
Type	Integer

The whole lookup table can be quickly reprogrammed through the *LUT Value All* feature.

Parameter	LUT Value All
`Value`	1028 bytes of memory containing 257 LUT entries. Each 16-bit LUT entry is aligned on a 32-bit boundary
GigEVision: GenICam	`LUTValueAll`
Type	Register

Important: Since gamma correction is implemented using the same hardware as the lookup table, gamma correction is disabled when the lookup table is enabled.

5.10 Color Processing

The ViC 47GR2020-I67 color camera allows color adjustments with the *Hue* and *Saturation* parameters. These adjustments work with all output pixel formats.

Important: When a bayer raw pixel format is selected, *Hue* and *Saturation* still work. However, when at least one of them is enabled (set to non-default value), the resulting image is slightly blurred because of the way these parameters are implemented internally.

5.10.1 Hue

The *Hue* parameter controls the color angle of the output image.

Parameter	Hue
Minimum	-180
Maximum	180
Default	0
GigEVision: GenICam	`Hue`
Type	Float
VCD Property	`VCDID_Hue\VCDElement_Value`

5.10.2 Saturation

The *Saturation* parameter controls the color saturation of the output image.

Parameter	Saturation
Minimum	0
Maximum	255
Default	64
GigEVision: GenICam	`Saturation`
Type	Float
VCD Property	`VCDID_Saturation\VCDElement_Value`

5.10.3 Color Correction Matrix

As seen in the Spectral Characteristics diagram, the frequencies at which the red, green and blue pixels respond to incoming light overlap. This causes the colors of objects in captured images to differ from the colors of the same objects seen in reality.

A RGB to RGB color correction matrix can be used to change the pixel data output of the camera so that the colors in captured image are a closer match to what is expected by human observers.

Parameter	Enable Color Correction Matrix
`True`	Enable Color Correction Matrix
`False`	Disable Color Correction Matrix
GigEVision: GenICam	`ColorTransformationEnable`
Type	Boolean
VCD Property	`VCDID_ColorMatrix\VCDElement_Value`

By default, the values of the color matrix coefficients are initialized with values optimized for skin tones and other everyday objects.

If necessary, the matrix coefficients can be controlled manually.

When using *GenICam*, select a coefficient using `ColorTransformationValueSelector` and then change it via the `ColorTransformationValue`.

When using *IC Imaging Control*, the matrix coefficients are controlled via the `VCDElement_ColorMatrix[RGB][RGB]` elements of `VCDID_ColorMatrix`.

Parameter	Red contribution to the red pixel
Minimum	-3.9375
Maximum	3.9375
GigEVision: GenICam	`ColorTransformationValue [ColorTransformationValueSelector=Gain00]`
Type	Float
VCD Property	`VCDID_ColorMatrix \VCDElement_ColorMatrixRR`

Parameter	Green contribution to the red pixel
Minimum	-3.9375
Maximum	3.9375
GigEVision: GenICam	`ColorTransformationValue [ColorTransformationValueSelector=Gain01]`
Type	Float
VCD Property	`VCDID_ColorMatrix \VCDElement_ColorMatrixRG`

Parameter	Blue contribution to the red pixel
Minimum	-3.9375
Maximum	3.9375
GigEVision: GenICam	`ColorTransformationValue [ColorTransformationValueSelector=Gain02]`
Type	Float
VCD Property	`VCDID_ColorMatrix \VCDElement_ColorMatrixRB`

Parameter	Red contribution to the green pixel
Minimum	-3.9375
Maximum	3.9375
GigEVision: GenICam	`ColorTransformationValue [ColorTransformationValueSelector=Gain10]`
Type	Float
VCD Property	`VCDID_ColorMatrix \VCDElement_ColorMatrixGR`

Parameter	Green contribution to the green pixel
Minimum	-3.9375
Maximum	3.9375
GigEVision: GenICam	`ColorTransformationValue [ColorTransformationValueSelector=Gain11]`
Type	Float
VCD Property	`VCDID_ColorMatrix \VCDElement_ColorMatrixGG`

Parameter	Blue contribution to the green pixel
Minimum	-3.9375
Maximum	3.9375
GigEVision: GenICam	`ColorTransformationValue [ColorTransformationValueSelector=Gain12]`
Type	Float
VCD Property	`VCDID_ColorMatrix \VCDElement_ColorMatrixGB`

Parameter	Red contribution to the blue pixel
Minimum	-3.9375
Maximum	3.9375
GigEVision: GenICam	`ColorTransformationValue [ColorTransformationValueSelector=Gain20]`
Type	Float
VCD Property	`VCDID_ColorMatrix \VCDElement_ColorMatrixBR`

Parameter	Green contribution to the blue pixel
Minimum	-3.9375
Maximum	3.9375
GigEVision: GenICam	`ColorTransformationValue [ColorTransformationValueSelector=Gain21]`
Type	Float
VCD Property	`VCDID_ColorMatrix \VCDElement_ColorMatrixBG`

Parameter	Blue contribution to the blue pixel
Minimum	-3.9375
Maximum	3.9375
GigEVision: GenICam	`ColorTransformationValue [ColorTransformationValueSelector=Gain22]`
Type	Float
VCD Property	`VCDID_ColorMatrix \VCDElement_ColorMatrixBB`

5.11 Region of Interest for Auto Functions

Visus IP67 series cameras allow for the setting of a region of interest that is used while controlling the Auto Exposure, Auto Gain and Auto White Balance functions.

5.11.1 Auto Functions ROI Enable

The *Auto Functions ROI Enable* parameter allows for the use of a region of interest for auto functions.

Parameter	Auto Functions ROI Enable
`True`	Auto functions only take a specified part of the image into account
`False`	Auto functions look at the whole image
GigEVision: GenICam	`AutoFunctionsROIEnable`
Type	Boolean
VCD Property	`VCDID_AutoRoi\VCDElement_Value`

5.11.2 Auto Functions ROI Preset

The *Auto Functions ROI Preset* parameter lets the user select from a list of ROI presets.

Parameter	Auto Functions ROI Preset
`Full Sensor`	Select the full output image
`Center 50%`	Select a rectangular area in the center of the output image
`Center 25%`	Select a small rectangular area in the center of the output image
`Bottom Half`	Select the bottom half of the output image
`Top Half`	Select the top half of the output image
`Custom Rectangle`	Select a custom rectangle for fine-grained control
GigEVision: GenICam	`AutoFunctionsROIPreset`
Type	Enumeration
VCD Property	`VCDID_AutoRoi\VCDElement_AutoRoiPreset`

5.11.3 Auto Functions ROI Custom Rectangle

When *Auto Functions ROI Preset* is set to *Custom Rectangle*, the user can manually set the position and size of the region of interest. The coordinates are relative to the origin of the current video format as specified by Partial Scan Offset.

Parameter	Auto Functions ROI Left
Minimum	0
Maximum	5104
Increment	2
GigEVision: GenICam	`AutoFunctionsROILeft`
Type	Integer
VCD Property	`VCDID_AutoRoi \VCDElement_AutoRoiLeftRelative`

Parameter	Auto Functions ROI Top
Minimum	0
Maximum	3824
Increment	2
GigEVision: GenICam	`AutoFunctionsROITop`
Type	Integer
VCD Property	`VCDID_AutoRoi \VCDElement_AutoRoiTopRelative`

Parameter	Auto Functions ROI Width
Minimum	16
Maximum	5120
Increment	2
GigEVision: GenICam	`AutoFunctionsROIWidth`
Type	Integer
VCD Property	`VCDID_AutoRoi \VCDElement_AutoRoiWidthRelative`

Parameter	Auto Functions ROI Height
Minimum	16
Maximum	3840
Increment	2
GigEVision: GenICam	`AutoFunctionsROIHeight`
Type	Integer
VCD Property	`VCDID_AutoRoi \VCDElement_AutoRoiHeightRelative`

5.12 User Sets

Visus IP67 series cameras can store their complete configuration into built-in non-volatile memory. The camera configuration can be saved into and restored from one of two available memory slots upon user's request. Additionally, the camera can be configured to load one of the user's camera configurations at startup.

5.12.1 User Set Selector

The *User Set Selector* parameter selects the memory slot on which consecutive load and save commands are executed.

Parameter	User Set Selector
`UserSet1`	First of the two memory slots for user configurations
`UserSet2`	Second of the two memory slots for user configurations
`Default`	A special memory slot that always contains the camera's factory default configuration. It cannot be overwritten
GigEVision: GenICam	`UserSetSelector`
Type	Enumeration

5.12.2 Load User Set

By using the *Load User Set* command, the user can restore the camera configuration from the memory slot selected by *User Set Selector*.

Parameter	Load User Set
Execute	Restore the camera configuration from the memory slot specified by *User Set Selector*
GigEVision: GenICam	`UserSetLoad`
Type	Command

5.12.3 Save User Set

By using the *Save User Set* command, the user can save the camera configuration into the memory slot selected by *User Set Selector*.

Parameter	Save User Set
Execute	Save the current camera configuration into the memory slot specified by *User Set Selector*
GigEVision: GenICam	`UserSetSave`
Type	Command

5.12.4 Default User Set

The *Default User Set* parameter controls the camera's startup behavior. It selects which memory slot is used for device initialization when the camera is powered up.

Parameter	Default User Set
`UserSet1`	Load configuration from the first memory slot
`UserSet2`	Load configuration from the second memory slot
`Default`	Load factory default configuration
GigEVision: GenICam	`UserSetDefault`
Type	Enumeration

5.13 Timestamp Control

Visus IP67 series cameras run an internal timestamp clock. The clock starts at zero when the camera is powered up.

The source of the timestamp clock has a frequency tolerance of ±20 ppm.

All image buffers sent by the camera have a timestamp attached to them.

Notification for asynchronous Events also contain a timestamp value.

The time stamp can be synchronized to other network devices via Precision Time Protocol.

5.13.1 Timestamp Latch

The *Timestamp Latch* command copies the current value of the camera's timestamp counter into the Timestamp Latch Value so that it can be read later.

Parameter	Timestamp Latch
Execute	Copies the current value of the camera's timestamp into Timestamp Latch Value.
GigEVision: GenICam	`TimestampLatch`
Type	Command

5.13.2 Timestamp Latch Value

The *Timestamp Latch Value* feature contains the value of camera's timestamp counter at the time of the previous execution of the Timestamp Latch command.

A human-readable interpretation of the value can be read from Timestamp Latch String.

Parameter	Timestamp Latch Value
GigEVision: GenICam	`TimestampLatchValue`
Type	Integer
Unit	µs

5.13.3 Timestamp Latch String

The *Timestamp Latch String* feature contains a human-readable interpretation of the value of Timestamp Latch Value.

Parameter	Timestamp Latch String
GigEVision: GenICam	`TimestampLatchString`
Type	String

5.13.4 Timestamp Reset

The *Timestamp Reset* command resets the camera's timestamp counter to start from zero.

Parameter	Timestamp Reset
Execute	Resets the camera's timestamp counter.
GigEVision: GenICam	`TimestampReset`
Type	Command

Important: Resetting the timestamp counter is not possible if PTP Enable is enabled.

5.14 Precision Time Protocol

All Visus IP67 series cameras can synchronize its internal clock to other devices via *Precision Time Protocol* (PTP, IEEE 1588).

When multiple PTP devices are connected through the same network, they will synchronize their clocks. This allows the image timestamps to remain comparable between cameras.

A camera running with PTP enabled can also schedule actions to be executed at a specified time point in the future through *Scheduled Actions*.

PTP is enabled by default.

5.14.1 PTP Enable

The *PTP Enable* parameter enables or disables the camera's usage of the *Precision Time Protocol*.

Parameter	PTP Enable
`True`	Use Precision Time Protocol
`False`	PTP disabled
GigEVision: GenICam	`PtpEnable`
Type	Boolean

5.14.2 PTP Status

PTP Status is a read-only feature that reports the current status of the *Precision Time Protocol* algorithm.

Parameter	PTP Status
`Master`	The camera acts as PTP master clock.
`Slave`	The camera synchronizes its time stamp to a PTP master clock.
`Uncalibrated`	PTP was recently enabled, or a recent change in the network configuration initiated a resynchronization.
`Disabled`	PTP is disabled.
GigEVision: GenICam	`PtpStatus`
Type	Enumeration

5.15 Action Scheduler

When *Precision Time Protocol* is enabled, the action scheduler can be used to plan and run actions at some point in the future.

The only action the camera can perform right now is triggering images.

Action triggers are only accepted when Trigger Source is set to `Action0` or `Any`.

5.15.1 Action Selector

The *Action Selector* feature selects the action that the Action Scheduler Time, Action Scheduler Interval, Action Scheduler Commit and Action Scheduler Cancel features act on.

Parameter	Action Selector
`0`	`Action0`, which is hard-wired to trigger images
GigEVision: GenICam	`ActionSelector`
Type	Enumeration

5.15.2 Action Scheduler Time

The *Action Scheduler Time* is the time for when an action is scheduled, specified as a PTP timestamp in nanosecond units.

Scheduling the action to a time in the past will cause the action to be performed immediately.

Scheduling a repeated action to start in the past will ignore missed actions and continue as if it had been scheduled earlier.

Parameter	Action Scheduler Time
GigEVision: GenICam	`ActionSchedulerTime`
Type	Integer

5.15.3 Action Scheduler Interval

The *Action Scheduler Interval* feature allows instructing the action scheduler to repeat the scheduled action in a fixed interval, indefinitely.

If the interval is set to 0, the action is performed once and not repeated.

The interval is specified in microseconds.

Parameter	Action Scheduler Interval
Minimum	0
Maximum	`4294967295 us`
GigEVision: GenICam	`ActionSchedulerInterval`
Type	Integer

5.15.4 Action Scheduler Commit

Executing the *Action Scheduler Commit* command commits an action to the queue of scheduled actions.

The action is planned to be performed at the time specified by Action Scheduler Time.

If Action Scheduler Interval has a value other than 0, the action will be repeated with the specified interval indefinitely, or until the Action Scheduler Cancel command is executed.

There is a finite number of queue slots available, trying to queue too many actions will fail. The maximum length of the queue is reported by the `ActionQueueSize` feature.

Parameter	Action Scheduler Commit
Execute	Schedule the action specified by Action Selector to be performed at a specified time in the future.
GigEVision: GenICam	`ActionSchedulerCommit`
Type	Command

5.15.5 Action Scheduler Cancel

Executing the *Action Scheduler Cancel* command cancels all scheduled actions of the action type selected by Action Selector.

Parameter	Action Scheduler Cancel
Execute	Cancel all scheduled actions of the type specified by Action Selector.
GigEVision: GenICam	`ActionSchedulerCancel`
Type	Command

5.16 Events

Visus IP67 series devices can send asynchronous event packets, notifying the application about certain events during device operation.

To enable a specific event, select the event to enable in Event Selector and then set Event Notification to *On*.

The way to receive the event notifications depends on the used camera SDK. In most cases, a notification handler has to be registered on the feature named after the event, e.g. *EventTest* or *EventExposureEnd*. Additional event data can often be queried via additional features with a derived name, e.g. *EventTestTimestamp* or *EventExposureEndFrameID*.

5.16.1 Event Selector

The *Event Selector* parameter selects an event to configure.

Parameter	Event Selector
`FrameTriggerMissed`	Selects the FrameTriggerMissed event
`Line1FallingEdge`	Selects the Line1FallingEdge event
`Line1RisingEdge`	Selects the Line1RisingEdge event
`Test`	Selects the Test event
GigEVision: GenICam	`EventSelector`
Type	Enumeration

5.16.2 Event Notification

The *Event Notification* parameter enables or disables the event selected by Event Selector.

Parameter	Event Notification
`On`	Enables notifications for the selected event
`Off`	Disables notifications for the selected event
GigEVision: GenICam	`EventNotification`
Type	Enumeration

5.16.3 Event Frame Trigger Missed

The *Event Frame Trigger Missed* feature is notified when the camera receives a trigger pulse, but the sensor was not in a state where a new exposure could be started.

The value of this feature has no meaning and should not be read.

Parameter	Event Frame Trigger Missed
GigEVision: GenICam	`EventFrameTriggerMissed`
Type	Integer

The *Event Frame Trigger Missed Timestamp* parameter identifies the point in time when the current frame trigger missed event occurred.

Please refer to the documentation of your camera SDK on how to safely read the timestamp associated with the current event when a notification is received.

Parameter	Event Frame Trigger Missed Timestamp
GigEVision: GenICam	`EventFrameTriggerMissedTimestamp`
Type	Integer

5.16.4 Event Line1 Falling Edge

The *Event Line1 Falling Edge* feature is notified when the input on Line1 changes from high to low.

The value of this feature has no meaning and should not be read.

Parameter	Event Line1 Falling Edge
GigEVision: GenICam	`EventLine1FallingEdge`
Type	Integer

The *Event Line1 Falling Edge Timestamp* parameter identifies the point in time when the current line1 falling edge event occurred.

Please refer to the documentation of your camera SDK on how to safely read the timestamp associated with the current event when a notification is received.

Parameter	Event Line1 Falling Edge Timestamp
GigEVision: GenICam	`EventLine1FallingEdgeTimestamp`
Type	Integer

5.16.5 Event Line1 Rising Edge

The *Event Line1 Rising Edge* feature is notified when the input on Line1 changes from high to low.

The value of this feature has no meaning and should not be read.

Parameter	Event Line1 Rising Edge
GigEVision: GenICam	`EventLine1RisingEdge`
Type	Integer

The *Event Line1 Rising Edge Timestamp* parameter identifies the point in time when the current line1 rising edge event occurred.

Please refer to the documentation of your camera SDK on how to safely read the timestamp associated with the current event when a notification is received.

Parameter	Event Line1 Rising Edge Timestamp
GigEVision: GenICam	`EventLine1RisingEdgeTimestamp`
Type	Integer

5.16.6 Event Test

The *Event Test* feature is notified when a test event occurs.

To generate a test event, use the *Test Event Generate* command.

The value of this feature has no meaning and should not be read.

Parameter	Event Test
GigEVision: GenICam	`EventTest`
Type	Integer

The *Event Test Timestamp* parameter identifies the point in time when the current test event occurred.

Please refer to the documentation of your camera SDK on how to safely read the timestamp associated with the current event when a notification is received.

Parameter	Event Test Timestamp
GigEVision: GenICam	`EventTestTimestamp`
Type	Integer

The *Test Event Generate* command can be used to generate a test event.

Parameter	Test Event Generate
Execute	Generate one test event
GigEVision: GenICam	`TestEventGenerate`
Type	Command

5.17 Bandwidth Control

When using multiple Visus IP67 series devices connected to the same network adapter, the data rate has to be considered to allow consistent operation.

To limit the bandwith of a camera, set Device Link Throughput Limit Mode to `On`, and set Device Link Throughput Limit to the desired maximum data rate.

5.17.1 Device Link Throughput Limit Mode

The *Device Link Throughput Limit Mode* parameter enables or disables the effect of Device Link Throughput Limit.

If set, the camera's internal frame rate is automatically reduced to fit into the available bandwith.

An inter-packet delay is added between streaming packets to ensure the network bandwidth does not exceed the limit.

Parameter	Device Link Throughput Limit Mode
`Off`	The bandwith the device uses for streaming is unlimited.
`On`	The maximum bandwidth the device uses for streaming is defined by Device Link Throughput Limit.
GigEVision: GenICam	`DeviceLinkThroughputLimitMode`
Type	Enumeration

5.17.2 Device Link Throughput Limit

The *Device Link Throughput Limit* parameter defines the maximum bandwidth used by the device to stream data.

Device Link Throughput Limit Mode must be set to `On` for *Device Link Throughput Limit* to have an effect.

Parameter	Device Link Throughput Limit
Minimum	1000000 Bps
Maximum	125000000 Bps
GigEVision: GenICam	`DeviceLinkThroughputLimit`
Type	Integer

6 Revision History

Date	Version	Description
2026/5/29		Initial Release of this document

ViC 47GR2020-I67 Technical Reference Manual

All product and company names in this document may be trademarks and tradenames of their respective owners and are hereby acknowledged.

The Imaging Source Europe GmbH cannot and does not take any responsibility or liability for any information contained in this document. The source code presented in this document is exclusively used for didactic purposes. The Imaging Source does not assume any kind of warranty expressed or implied, resulting from the use of the content of this document or the source code.

The Imaging Source Company reserves the right to make changes in specifications, function or design at any time and without prior notice.

Last update: August 2026
© 2026 The Imaging Source
All rights reserved. Reprint, also in parts, only allowed with permission of The Imaging Source Europe GmbH.

All weights and dimensions are approximate. Unless otherwise specified, the lenses shown in the context of cameras are not shipped with these cameras.

Headquarters:

The Imaging Source Europe GmbH
Überseetor 18, D-28217 Bremen, Germany
Phone: +49 421 33591-0

North & South America:

The Imaging Source, LLC
4600 Park Road, Suite 470, Charlotte, NC 28209, United States
Phone: +1 877-462-4772

Asia Pacific:

The Imaging Source Asia Co., Ltd.
3F., No. 43-7/8, Zhongxing Road
Xizhi District, New Taipei City 221012, Taiwan
Phone: +886 2-2792-3153

www.theimagingsource.com